STEREOPHONIC DUAL 35 WATT POWER AMPLIFIER

MODEL

HF-87

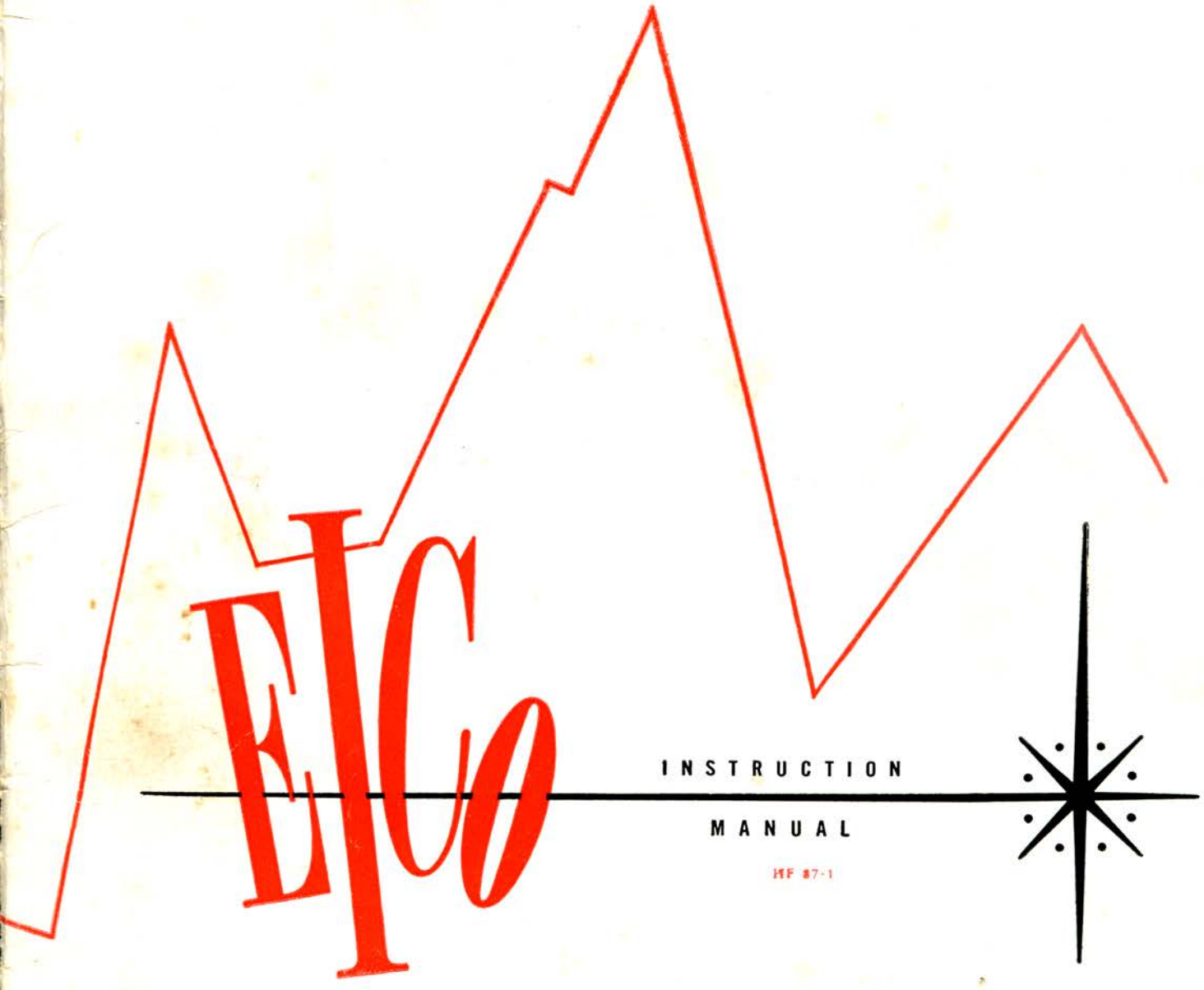

INSTRUCTION

MANUAL

HF 87-1

ELECTRONIC INSTRUMENT CO. INC.
3300 NORTHERN BLVD., L. I. CITY 1, N. Y.

EICO

MODEL HF 87 *STEREO DUAL POWER AMPLIFIER*

general description

GENERAL

The HF87 is a dual power amplifier for stereo use with the superb HF85 stereo preamp or any good self-powered stereo preamp. Each power amplifier is conservatively rated at 35 watts. They employ our thoroughly proven cathode-coupled phase inverter circuit, preceded by a direct coupled voltage amplifier. The output stage employs ultra-linear connected, self-biased, push pull EL-34's.

The two amplifiers may be operated in parallel to deliver 70 watts for non-stereo use; either input can be made common for both amplifiers by a service selector switch. Other convenience features include a level control at each input, an a-c power switch, two convenience outlets, and a fuse in an extractor post mounting.

The common power supply for the two amplifiers exhibits very good regulation because of the self-bias operation and the very low impedance characteristic of silicon diode rectifiers. As a result, signal conditions in one amplifier have negligible effect on the operating conditions of the other amplifier - a worthwhile objective in a high quality design. To insure long life for the silicon diode rectifiers, electrolytics and tubes, a Surgistor is employed to limit the starting surge currents.

SPECIFICATIONS

Output Power: 70 watts (two 35 watt amplifiers) continuous, 140 watts peak

IM Distortion (60 & 7000 cps at 4:1): 1% at 70 watts

Harmonic Distortion: Less than 1% from 20 to 20,000 cps within 1 db of 70 watts

Frequency Response: ±0.5 db 5 cps - 100kc

Transient Response: Excellent square wave reproduction (3 usec rise time); negligible ringing, rapid setting on 20kc square wave

Inverse Feedback: 17 db

Stability Margin: 17 db

Damping Factor: Above 11, 20 cps to 20kc

The intrinsic quality of the driving circuit, the output tubes and the output transformers is so high that less feedback than usual is required to obtain extremely low distortion figures. As a result, the amplifiers have high margins of stability.

Other important design features, characteristic of all EICO amplifiers, are a rugged and generous chassis, maximum separation of power tubes from each other and heat-sensitive components, trouble-free-point-to point wiring, and painstaking attention in reducing distortion without compromising stability. Filter electrolytics and rectifiers operate well below maximum ratings to insure long life.

The HF-87 has been designed to maintain its excellent characteristics under speaker load (including electrostatic types) as well as the resistive load normally used for testing. Phase corrections have been provided at both extremes of the audio spectrum to insure stability under all conceivable conditions and to insure that variations in components and construction will not affect the performance. Stability is maintained on all speaker taps with loads ranging from zero to infinity. Overload characteristics are excellent. The HF-87 will not exhibit bounce or flutter under pulsed conditions.

Sensitivity: 0.38V for 70W output

Channel Separation: 55 db

Hum: Better than 90 db below rated output

Speaker connections: 4, 8, 16, and 32 ohms

Controls: Level Ch. 1, Level Ch. 2, "Service Selector" switch, ON-OFF switch

Tubes: 1-ECC83/12AX7, 2-6SN7GTB, 4-EL34, 2-silicon diode rectifiers protected by a Surgistor

Power Source: 117V, 60c

Power Consumption: 215 watts; 5 amp. fuse

Size: HWD - 6" x 15" x 11"

Shipping Weight: 32 lbs.

COPYRIGHT© 1959 ELECTRONIC INSTRUMENT COMPANY, Inc.

mechanical installation

GENERAL

a) HEAT DISSIPATION (VENTILATION): In common with other electronic equipment, the Model HF-87 produces a great deal of heat in normal operation. Unless continuous and adequate air flow is obtained around the heat producing elements, these elements will overheat and their useful life will be greatly curtailed. Adequate ventilation will be provided if the amplifier is installed in an open-back console provided that the top of the amplifier is spaced at least two inches below any shelf mounted above it. If the cabinet is enclosed at the rear, provide several large holes or slots as low down and as high up in the cabinet back as possible. As an alternate, holes may be provided in the sides, bottom, or top of the cabinet. The important thing to remember is that effective ventilation requires provision for cool air to enter at the bottom and to leave at the top.

If the amplifier is not installed in a console, it should be situated preferably on an open surface. An attractively finished matching cover for the MODEL HF-87 is available, which will provide a "finished" appearance as well as protection when the amplifier is not installed in a console. Four rubber feet are also provided so that the amplifier will not mar the surface of furniture on which it is placed.

b) ACCESSIBILITY TO PARTS: Tubes are the most frequently replaced items in electronic equipment. If the amplifier is placed in a console, sufficient space should be allotted to reach and remove any tube in the amplifier. Furthermore, input and output terminals of the amplifier should be accessible to permit easy interchanging of system components for comparison. If antennas are strung around the back of the console in which the amplifier is installed, arrange them so they will not interfere.

c) ELECTRICAL ISOLATION: To realize the full benefit of having a power amplifier physically separate from the preamplifier-control unit and/or tuner, the power amplifier should be placed at least one foot away (more if possible) from either or both of these units.

d) ACOUSTICAL ISOLATION: If amplifier and speaker are installed in the same cabinet, provide sufficient separation to minimize mechanical speaker vibration reaching the amplifier. The minimum separation is about one foot.

CONSOLE MOUNTING

Having determined a proper location for the amplifier in the particular console, the correct procedure for mounting the amplifier chassis is as follows: a) If the rubber feet have been inserted in the bottom plate, remove them (pry out with a thin screwdriver). b) Remove the 10 screws which fasten the bottom plate to the chassis. c) Place the bottom plate (bumps facing up) at the location on the shelf or the other mounting surface in which it is desired to mount the amplifier. With a sharp pencil, placed with its point directly against the edge of the lower surface of the bottom plate, draw the outline of the bottom plate on the shelf and also mark the position of the two extreme holes on both the long sides (front & rear). d) Remove the bottom plate and drill each of the marked holes on the shelf to a diameter of 1/4". e) Refasten the bottom plate to the chassis, with the six #8 x 3/8 screws previously removed, using the center holes on each of the long sides and the two holes on each of the short sides. f) Replace the chassis on the shelf, positioning it exactly in the outline previously drawn. g) From the bottom side of the shelf, insert a #8 x 1" screw with a 1/2" flat washer against the head through each of the four front and rear holes. These screws engage the stamped nut over each hole on the chassis flange and when tightened secure the chassis to the shelf.

electrical installation

POWER

a) POWER REQUIREMENTS: The EICO Model HF-87 requires 215 watts at 110 to 120 volts, 60 cycles AC.

b) REMOTE SWITCHING: The EICO Model HF-87 is provided with its own ON-OFF power switch. If the HF-87 power amplifier is being used with a preamplifier, such as the EICO HF-85, or a self-powered tuner-preamplifier, the line cord of the HF-87 is inserted in a switched 117VAC convenience outlet in the control unit. Turn the power switch on the HF-87 to ON. Note: When using a self-powered preamplifier-control unit, touch one end of a wire to the preamplifier chassis and the other end to the power amplifier chassis. If a spark occurs, pull out the HF-87 line cord plug and re-insert it with the prongs reversed.

c) CONVENIENCE OUTLETS: When the HF-87 is used with a preamplifier, such as the EICO HF-85, normally

the convenience outlets on the preamplifier will be used. However, the HF-87 outlets may be used also, if desired, in which case both of them will be "switched".

INTERCONNECTION OF COMPONENTS: SIGNAL

All input connections are to be made using single conductor shielded cable. Unless the source has a low impedance output, such as a cathode follower (with which up to 50 ft. of cable can be used), use the shortest possible connection. In any case, use a low capacity type of shielded cable (as low as 25 mmf capacity per foot is available). Both ends of the cable must be fitted with RCA type phono plug connectors. For speaker connections, use plastic covered lamp cord or flat ribbon twin lead.

(1a, 1b, 1c below are possible input connections)

1a) STEREO CONTROL PREAMPLIFIER TO HF-87 DUAL POWER AMPLIFIER: Use two cables as described above. Connect one cable from preamplifier output 1 to input 1 on the HF-87. Connect another from preamplifier output 2 to input 2 on the HF-87. Set the Service Sel switch at the SEPARATE position. Power amplifier can deliver 35 watts per channel. DO NOT use dual conductor shielded lead.

1b) MONAURAL CONTROL PREAMP TO HF-87 DUAL POWER AMPLIFIER: Use one cable as described above. Connect this cable from the preamplifier output to input 2 on the HF-87. Put the Service Sel switch into the COMBINED position. The power amplifiers can deliver a total of 70 watts to the speaker.

1c) USING YOUR OLD AMPLIFIER: You can use your old power amplifier or integrated amplifier for one stereo channel, and the HF-87 connected for parallel operation of the dual amplifiers for the second stereo channel. This may be worthwhile only if your old amplifier has a rated power output of at least 50 watts. Connect one cable from stereo preamp output 1 to input 2 of the HF-87 and set the Service Sel switch at the COMBINED position. With the speaker connection terminals of the dual amplifiers connected in parallel, the HF87 can deliver 70 watts to the speaker in stereo channel 1. Connect another cable from stereo preamp output 2 to input of your old power amplifier or to the tuner or auxiliary input of your old integrated amplifier. (In the latter case, set the tone controls of the old amplifier to "flat" and loudness contour or filter controls to no effect). The power capability of the second channel will then be the same as that of your old amplifier.

(2d, 2b, 2c, & 2d below are possible output connections)

2a) In the situation described in 1a above, for stereo operation connect one speaker system between "G" and the appropriate impedance tap on the speaker connection terminal board for amplifier 1. Similarly, connect the appropriate impedance tap on the speaker connection board for amplifier 2. If you have only one speaker system at this time, and wish to use the power of both amplifiers combined to drive it, then use the parallel operation connection described in 2d below.

2b) In the situation described in 1b above, if you have two speaker systems connect one to each speaker connection terminal board (one for each amplifier) just as described in 2a above. If you have only one speaker system, use the parallel operation connection described in 2d below.

2c) In the situation described in 1c above, it is implied that you have two speaker systems. Connect one speaker system to your old amplifier and the second speaker system to the HF-87 dual power amplifiers connected in parallel as described in 2d below.

2d) Parallel operation of the HF-87 dual power amplifiers is accomplished as follows: First determine the rated impedance of the speaker system to be connected to the paralleled amplifiers and multiply it by two. The result will be 8, 16, or 32 ohms. Locate the connection terminals on each of the two speaker connection terminal boards on the HF-87 assigned to the tap of this value. Connect an external jumper wire between this particular pair of terminals (32 to 32 for a 16Ω speaker, 16 to 16 for an 8Ω speaker, or 8 to 8 for a 4Ω speaker). Finally, connect the speaker between one of the "G" terminals and one of the pair of terminals connected together by the jumper wire.

CONTROL ADJUSTMENTS

a) The INPUT LEVEL ADJ. controls are intended to protect the speaker system from "blasting" should someone turn the preamplifier-control unit level controls to full. It permits you to attenuate the preamplifier output signal by the desired amount at the input to the power amplifier where it can not be "fiddled" with. Start by setting the INPUT LEVEL control to the maximum counter-clockwise (maximum attenuation) position using a screwdriver. Set the LEVEL control on one channel of the preamplifier at the midpoint of its range of rotation. Turn your phonograph on and play an average orchestral record. Then slowly rotate the appropriate INPUT LEVEL ADJ. control clockwise until the music is at normal (or concert) listening level. Repeat for the second channel. This completes the adjustment.

b) ON-OFF SWITCH: Should be set at the ON position when the unit is used with a preamplifier. It may be used as a power on-off switch when the amplifier is accessible.

TROUBLE-SHOOTING PROCEDURES

Your amplifier should require little service except for normal tube replacement. We recommend no substitutions for the tube types used in this amplifier. The EL34 type is distributed nationally by the Amperex Electronic Corporation (230 Duffy Ave., Hicksville, L.I., N.Y.) and Mullard Ltd. (International Electronics Corp., 81 Spring St., N.Y. 12, N.Y.) If necessary, replacements at any time can be obtained directly from EICO.

To facilitate servicing, remedial and trouble-shooting procedures have been provided in the TROUBLE-SHOOTING CHART that follows. A VOLTAGE AND RESISTANCE CHART is also provided as an aid in locating defective components and to permit a careful, stage-by-stage check of the amplifier. DC operating voltages are given both at no signal and at a signal developing 35 watts output as well as the corresponding 1kc signal voltages.

To isolate the source of unusual hum or noise in your system, first turn off the AC power and then unplug the audio cable connecting to the amplifier input. Then turn the AC power on again and note whether hum or noise has decreased. If it has, the fault is in the preamplifier or associated equipment and measures should be taken to correct it as described in the service notes for these units. If it is desired to provide a good building ground for your entire system, run a lead from under either speaker connection terminal "G" to a cold water pipe. Do not connect such a ground wire to other components in the system.

If the trouble is no output or low output and the amplifier is suspected, check AC signal voltages starting at the input and work step-by-step toward the output, using a sine-wave audio signal generator and a VTVM. Set the input signal to .38 volt. The corresponding grid and plate signal voltages for this input are indicated on the voltage chart. Repeat for the second channel. This procedure should suffice to localize the defective stage.

If the trouble is an excessively distorted output, try tube replacement, signal tracing, or proceed directly to voltage and resistance measurements.

When the defective stage is localized, proceed to a resistance and voltage check of the stage, using the data in the Voltage and Resistance chart. Disconnect the amplifier from the power line and discharge capacitors prior to making any resistance check or removing the EL34 output tubes. Do not turn the amplifier on with any of the output tubes removed.

CHECKING A TYPICAL TUBE STAGE

1. Check tube.
2. Check plate and cathode resistors.
3. Check coupling capacitors for leakage or short.
4. For output stage, check dc resistance of transformer windings.
5. Check for open grid leak resistor.
6. Check cathode by-pass capacitors for short.
7. If no or low B+ voltage on the tube, check decoupling path for open or defective R31, R32 or R35, filter capacitors C15, C16, C17 or C19, for short, or defective rectifiers CR1 or CR2.
8. If wiring and circuit components including the tube check O. K. and B+ voltage is excessive, check the decoupling path for short or defective R31, R32 or R35.

SERVICE

If trouble develops in your instrument which you can not remedy yourself, write to our service department listing all possible indications that might be helpful. Note number appearing in red under the word "Manual" on the front cover. If there is no number, state this. If desired, you may return the instrument to our factory where it will be placed in operating condition for $8.00 plus the cost of parts replaced due to their being damaged in the course of construction. NOTE: Before returning this unit, be sure all parts are securely mounted. Attach a tag to the instrument, giving your home address and the trouble with the unit. Pack very carefully in a rugged container, using sufficient packing material (cotton, shredded newspaper, or excelsior), to make the unit completely immovable within the container. The original shipping carton is satisfactory, providing the original inserts are used or sufficient packing material is inserted to keep the instrument immovable. Ship by prepaid Railway Express, if possible, to Electronic Instrument Co., Inc., 33-00 Northern Blvd., Long Island City 1, N.Y. Return shipment will be made by express collect. Note that a carrier cannot be held liable for damages in transit if packing IN HIS OPINION, is insufficient.

TRANSFORMER TEMPERATURE

The temperature of the transformers used in the HF-87 run at less than 195°F despite the fact that the safety limit is at a much higher 221°F. Although 195°F is cool for a transformer, it is very hot to the touch. Transformers which seem too hot when touched with the hand, are usually good and are actually not overheating.

Output transformers usually run cooler than power transformers. Some output transformers may appear hotter than others due to being located near hot components such as output and power tubes and power transformers.

GENERAL INSTRUCTIONS

The EICO kit you are about to assemble and wire has been designed to meet the highest standards of performance. It is a high quality instrument, to be constructed from the finest components available anywhere.

The following Construction Manual has been written to carefully guide you through the construction of your kit. If you follow all the instructions implicitly and work carefully without haste, you will be rewarded with many years of fine performance from this instrument and a personal inner satisfaction from a job well done.

Your Construction Book: Beginning with the number on this page, and throughout the rest of your Construction Manual, the page numbers are followed by a "C" (1C, 2C, etc.). The Instruction Manual, detailing the installation, operation and maintenance of your instrument, are identified by numerals only, without any letters following these numerals.

Observe that the Instruction Manual section precedes this page and follows the last page of your Construction Book section. After you are certain that you have successfully completed the wiring of your kit, you no longer need the Construction Book. You may remove these centrally located Construction pages, leaving the Instruction section intact for future reference. Keep the Instruction Manual for information as to the installation and operation, as well as for any maintenance that may be necessary in the future, on your amplifier.

Choosing a Workbench and Tools: To avoid the accidental loss or misplacement of components, choose a convenient workbench before unpacking your new kit. You will find it most advantageous to choose a corner on a table that will not be used for any other purpose until you have completed the construction of your kit. Proper precautions should be observed to prevent damage to any table top from a soldering iron or any heavy tools.

When you check the component parts against the Parts List later on, it will be convenient to separate the various pieces into types of components and hardware sizes. It will be convenient to keep these sorted pieces separated in the compartments of specially made trays. Small cartons, egg trays or a refrigerator ice tray with dividers serve equally well.

Several basic tools are required to constructing this kit. They are:

1. Screwdriver - 3/16" to 1/4" blade
2. Screwdriver - 1/8" blade
3. Longnose pliers - 5" or 6"
4. Diagonal wire cutters
5. Soldering iron (100 watts), solder gun or pencil iron (35 watts).
6. Gas Pliers
7. High quality rosin core radio solder. DO NOT use Acid Core solder or Paste fluxes under any circumstances.

The following tools are useful, but are not absolutely necessary to construct this kit:

1. Socket wrench set
2. Open end wrench set
3. Wire Stripper

Unpacking the kit: This procedure serves two purposes. First, it lets you get acquainted with the various types of components. Second, you check to ascertain if you received all the parts required to build the kit. This is your opportunity to have any packing errors corrected.

When unpacking, handle all parts carefully so that you will not damage any fragile components. Do not throw any packing material away until after having checked all components. Check each part off against the "Parts List" which you will find in your Instruction Book. Check the packing for any small parts.

From time to time, due to modernization or possible error, corrections may be necessary to your Parts List. If there are any changes to be made, they will be listed on the loose "addenda sheets" included with this book. Make these corrections, if any, before checking your components. If no corrections to your Parts List are noted on the addenda sheets, or there are no addenda sheets, assume your Parts List is correct, and commence to check all components against this list.

To enable rapid identification of electronic parts, each part has been assigned one or two letters of the alphabet called a reference designation. These reference designations are nothing more than an initial letter or two representing the name of the part. For example, a vacuum tube has been assigned the reference designation letter V, and a transformer the letter T. Thus, if you have seven vacuum tubes and three transformers in your kit, these parts would be identified by the designation V1 through V7 and T1 through T3, respectively.

The reference designation assigned to receptacles (often referred to as jacks) is the letter J. The different types of jacks and plugs used in this kit are so lettered and illustrated in the construction steps. In some cases, two jacks are mounted on one bakelite strip and are so noted.

Capacitors have symbol numbers starting with a C.

Some capacitors, such as electrolytics, are marked with a + and a -. These are the only capacitors that must be mounted in a specific direction. Follow the direction for mounting described in the appropriate steps below. When no direction is mentioned, mount the capacitor either way. Some molded or paper capacitors have a black line near one end. Although these can be mounted without any concern for direction, it is preferable that you follow the direction for the black line shown on the drawing. If there is no black line on the drawing or on the capacitor, just mount the capacitor in either direction.

Ceramic capacitor tolerance may be noted by a letter rather than a number. A "K" indicates 10%. An "M" indicates 20% and a "P" indicates a GMV.

Resistors are denoted by the symbol letter R.

Some resistors have their resistance value stamped on the surface of the resistor body. However, other fixed resistors are coded with color marking which indicate their value. The actual color code of these resistors is noted in the parts list. In some instances, even when the color code is noted, in the book, the actual resistor value may be stamped on the body, rather than the color code.

The tolerance of a resistor is the amount the resistance value can vary around its marked value. Thus, if a 1K (1000Ω) resistor has a ±10% tolerance, its actual value can be between 900 ohms and 1.1K ohms. If the same resistor has a ±5% tolerance, its actual value can be between 950 ohms and 1.05K ohms. The fourth color band from the end of the resistor, indicates the tolerance. The gold band indicates a 5% tolerance, the silver band a 10% tolerance and the absence of a band a 20% tolerance. This tolerance value is always stated or given as part of the color code when the resistor is listed. If the resistor is marked with a number rather than a color code, the tolerance, is stamped on the body. In your kit, 5% resistors may be substituted for 10% and 10% resistors substituted for 20%. However, be certain that you do not use a 10% resistor when a 5% resistor is required or a 20% resistor when a 10% or 5% resistor is specified.

Silicon rectifiers are efficient diodes replacing rectifier tubes. One end is the cathode (+). On the second end is the anode (-). The various possible shapes of rectifiers used are illustrated. The cathode and anode ends are designated in the drawing.

SILICON RECTIFIERS

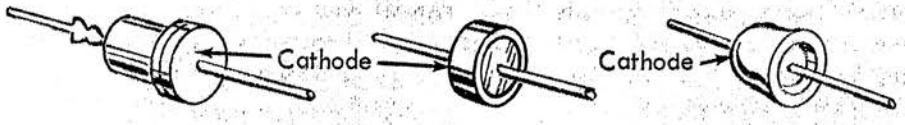

The various types of terminal strips are assigned the designation letters TB. The types used in this kit are illustrated and denoted in this figure.

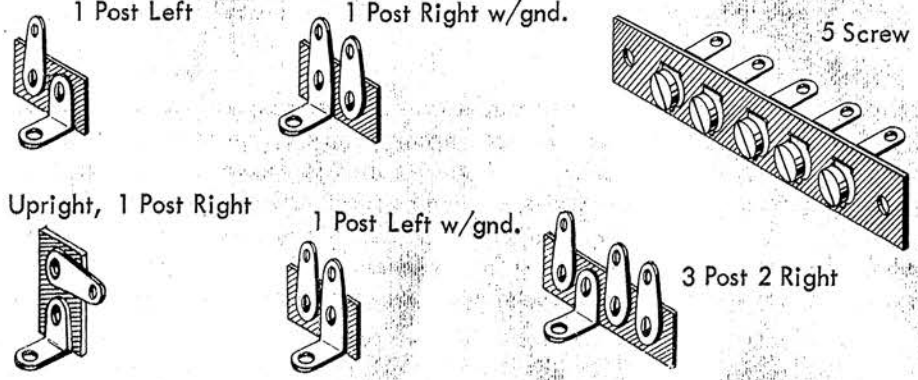

A device used to protect the components from overload on initial voltages surges is called a surgistor and designated by SR.

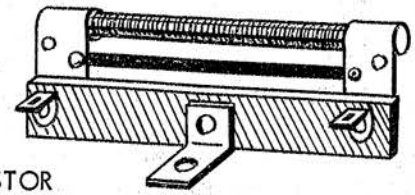

SURGISTOR

Hardware is a general term for mechanical parts used in the assembly of EICO kits. Such items are usually screws, nuts and washers. Machine screws are sized in accordance with the diameters of the threaded portion (#4, #6, #8, #10) with the smaller number denoting the smaller diameter. The second number indicates the number of threads to an inch. Thus, a #6-32 screw has a #6 diameter with 32 threads per inch. The final number indicates the length of the threaded portion. A #6-32 x 3/8 has a 3/8" long threaded portion. The diameters are shown in the figure.

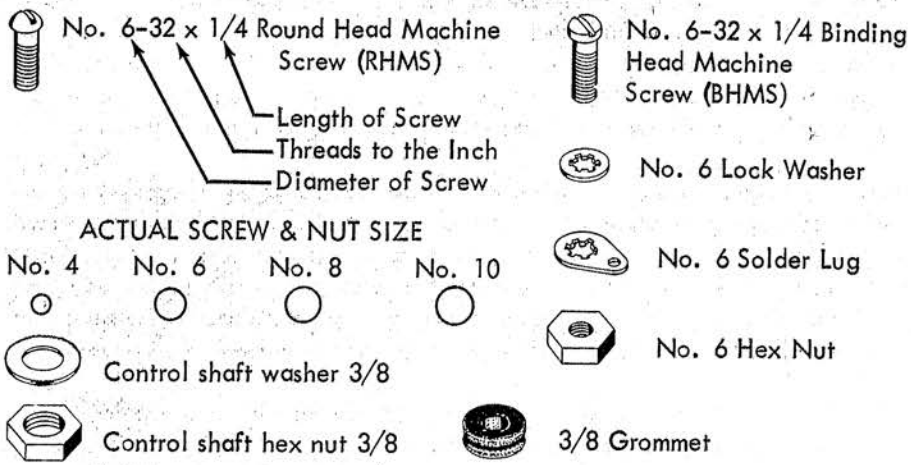

The figure also shows the various head types in which these screws are supplied. Use the type specified in the particular step.

Washers and nuts are sized in accordance with the diameter of the screws they are used with. Tinnerman speed nuts are generally used to mount the bottom plate.

Various types of washers are supplied. A lockwasher has internal or external teeth. A flat washer is made out of thin metal.

Grommets are rubber devices used for insulating wire from the metal chassis.

Most of the other component parts used with the kit are self evident and require little further explanation or description.

If after having checked all your components against the parts list, you find a shortage, please write us at

Customer Service
Electronic Instrument Co., Inc.
33-00 Northern Blvd.
Long Island City 1, N.Y.

Include the inspection slip with your letter describing the shortage. If there is any slight hardware shortage, you can expedite matters by purchasing these pieces at your local jobber or hardware store.

Soldering Techniques: To get a good, clean connection, use the soldering techniques described below. USE THE BEST GRADE OF ROSIN CORE RADIO SOLDER ONLY. UNDER NO CIRCUMSTANCES SHOULD ACID CORE SOLDER OR FLUX BE USED. The use of acid core solder or paste fluxes can cause serious corrosion and will void all the repair and service guarantees.

The soldering and wiring techniques described below should be practiced several times by the novice before he attempts to wire or solder components in the actual kit. Practice several connections with a spare piece of wire and a socket or terminal strip you can purchase at your local jobber.

First make a good mechanical connection. Remove 1/4" of insulation from the end of the wire. Feed the wire through the solder lug opening so that the wire insulation just touches the lug. With the long-nose pliers, bend the wire lead around the lug and crimp the wire lead to the lug. Now solder this wire. Place the tip of the hot soldering iron on the lug or terminal at a point close to the wire being soldered. Apply the solder to the junction of the lug, wire and soldering iron. When the lug and wire have been heated to the correct temperature, the solder will flow into and over the joint. Remove the iron when the solder starts to flow and remove the solder immediately after. Use only enough solder to cover the wire at the connection point.

A poor solder connection is obvious by its appearance. A grainy or pitted joint is a poor connection due to insufficient heat. Blobs of solder on the wire or solder lug is also due to insufficient heat. Solder should flow as a result of the heated lug and wire. Do not solder by applying solder to the iron tip and then wiping the hot solder onto the joint. A well soldered joint is indicated by a smooth bright finish on the soldered connection.

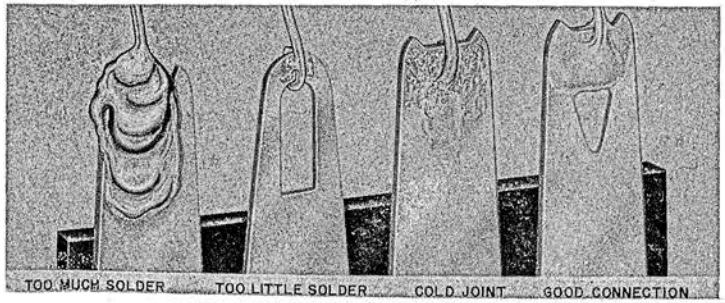

Construction Hints: The various lengths of wire to be used in the kit are specified in the construction steps. After cutting the wire to the length specified, strip the insulation off 1/4" from each end. The exposed wire will be used to make the actual connection to the solder lug.

Shield wire sizes are also indicated in the specific construction step. In the particular step you will be told just how much of the outer insulation must be removed and just how long the shield strands and inner conductor (s) must be.

Components, such as resistors, capacitors, transformers, etc., may have longer leads than specified. Cut the leads to the length indicated in the particular construction step. This length is to be measured from the body of the component. In the case of insulated leads, strip 1/4" of insulation off from the ends and twist the strands (if any) of the wire together.

As an example, one step may specify that each lead on a resistor be cut to 1/2". 1/4" of each lead is used to make a mechanical connection to the solder lug. The other 1/4" is between the socket and the component so that the component will not be overheated when soldering.

When a connection is indicated, a (C) or an (S) will appear next to the lug involved. The (C) indicates that the connection should be made mechanically, but is not to be soldered yet, since other leads are to be connected to this same lug. The (S) indicates that the connection should be made and soldered immediately. However, the (S) is always followed by a number, such as (S1), (S2), (S3), etc. This number indicates the number of connections made to the lug. It is a check on the accuracy of your work.

As an example, if it says (S3), you should count three leads going to the lug to be soldered. If there are less than three leads at this particular lug, you will know that you have forgotten one or more leads, or connected them to the wrong lugs. If there are more than three leads, you can be certain you have connected an extra wire to this lug, which should probably go elsewhere.

When you assemble the components in your unit, mark the symbol number of each socket and terminal strip near the part with a crayon. This will facilitate your wiring operation.

When wiring, lay the component in, close to the chassis, dressed as shown in the drawing. Be careful to avoid shorts at the lugs. The book is written so that the wiring closest to the chassis usually gets wired in first. The next layer of wires are to be soldered in next. In each case, dress the leads and components as close to the chassis as possible.

Next to each step number you will find a parenthesis ( ). After you have completed each step, make a check mark in the parenthesis so that you will have a record of your work. Follow the steps in the sequence written in the book. Do not skip steps or pages.

If any addendas are included in your book to modernize your instrument or make corrections or part substitutions, be sure to correct the Construction Book first before you start to wire or assemble your kit.

You are now ready to construct your fine stereo dual power amplifier.

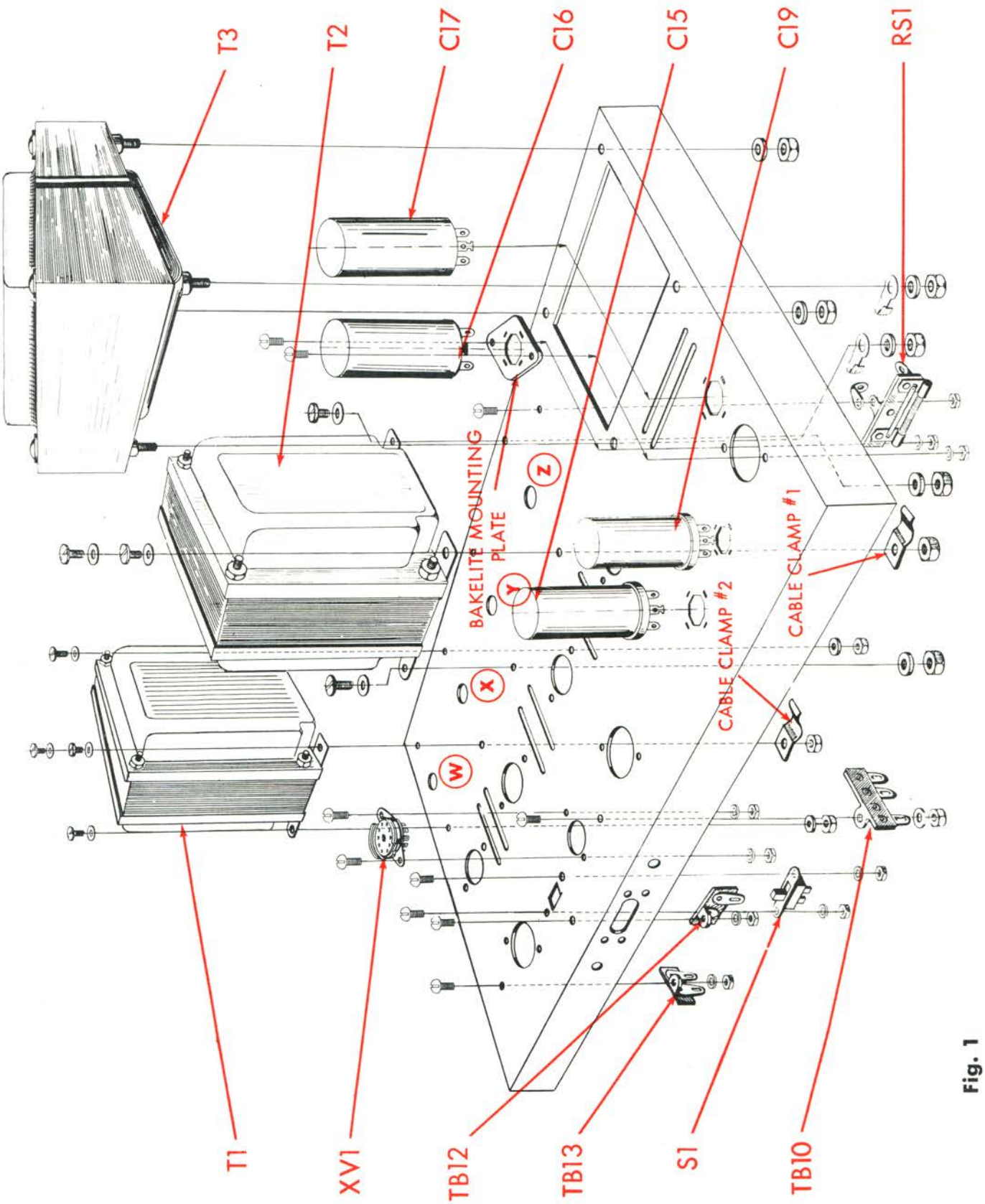
T3
T2
C17
C16
C15
C19
RS1
BAKELITE MOUNTING PLATE
CABLE CLAMP #1
CABLE CLAMP #2
T1
XV1
TB12
TB13
S1
TB10

Fig. 1

TOP OF CHASSIS ASSEMBLY

( ) 1. Fig. 1. On power transformer T 3, cut both green leads to 9", one red lead to 6", the other red lead to 7", the white lead to 3", one black lead to 2", the other black lead to 4", and the two blue leads to 1/4" each. On each of these leads (except the blue leads), strip the insulation back 1/4". The blue leads will not be used and the insulation should not be stripped off. Mount the transformer as shown with the green leads toward the center of the chassis and the black leads close to the side of the chassis. Use four #8 lockwashers and four #8-32 hex nuts to secure the transformer to the chassis. Under each of two of the lockwashers, mount a #8 ground lug, as shown in Figure 3.

( ) 2. Fig. 1. On both output transformers T 1 and T 2, cut the black lead to 4", the brown lead to 4 1/2", the green lead to 5", the yellow lead to 5 1/2" and the orange lead to 6". Cut the blue and the blue-yellow lead to 4 1/2" and the red, brown and brown-yellow leads to 5 1/2". Strip back 1/4" of the insulation from the ends of each of the leads. Mount transformer T 1 with the black, brown, green, yellow and orange leads going through hole "W" and the remaining leads going through hole "X". Mount transformer T 2 with the black, brown, green, yellow and orange leads going through hole "Y" and all the remaining leads going through hole "Z". Secure each transformer to the chassis using four #10-32 screws and four #10 flat washers from above the chassis and four #10 lockwashers and four #10-32 hex nuts from below the chassis. Under one of the lockwashers used in the mounting of transformer T 2, place cable clamp #1. Run the leads from hole "Z" under this cable clamp. Under one of the lockwashers, used in the mounting of transformer T 1, place cable clamp #2. Run the leads from hole "X" under this cable clamp.

( ) 3. Fig. 1. Mount the single pole double throw slide switch S 1, from below the chassis, as shown. See figure #3 for orientation. Use two #6-32 screws, two #6 lockwashers and two #6-32 hex nuts.

( ) 4. Fig. 1. From below the chassis, mount the 3 post 2 right terminal strip, TB 10; the one post left terminal strip, TB 12; and the one post left with ground terminal strip, TB 13, as shown. Orient these terminal strips as shown in figure 3. Use one #6-32 screw, one #6 lockwasher and one #6 hex nut to secure each terminal strip to the chassis.

( ) 5. Fig. 1. Mount the 9 pin miniature socket with shield support XV1, from above the chassis, as shown. Use two #4-40 screws, two #4 lockwashers and two #4-40 hex nuts. Note the orientation of this socket in figure #3.

( ) 6. Fig. 1. Mount the bakelite capacitor mounting plate for C 16 from above the chassis, as shown. Use two #6-32 screws, two #6 lockwashers and two #6-32 hex nuts.

( ) 7. Fig. 1. Into the slots in the bakelite capacitor mounting plate (mounted in step #6) insert the tabs from the 300 ufd, 300V electrolytic can capacitor, C 16. Note the orientation of this capacitor in figure #3. Twist the tabs somewhat less than a quarter turn. Do not twist the tabs excessively or they will shear off. Take precautions so that the tabs used to secure the capacitor to the bakelite will not short against the surrounding metal chassis.

( ) 8. Fig. 1. Mount the 300mf 300 volt electrolytic capacitor C 17, as shown. Note the orientation in figure #3. Insert the capacitor mounting tabs into the slots in the chassis and twist the tabs a little less than a quarter turn. Do not twist the tabs excessively or they will shear off. Solder the capacitor tab without a hole to the chassis at the slot in the chassis.

( ) 9. Fig. 1. Mount the 80mf 500 volt electrolytic capacitor C 19, as shown. Note the orientation in figure #3. Insert the capacitor mounting tabs into the slots in the chassis and twist the tabs a little less than a quarter turn. Do not twist the tabs excessively or they will shear off. Solder the capacitor tab without a hole, to the chassis at the slot in the chassis.

( ) 10. Fig. 1. Mount the 40-20 mfd/500 volt electrolytic capacitor C 15, as shown. Note the orientation of the capacitor (half-moon and triangle) in figure #3. Insert the capacitor mounting tabs into the slots in the chassis and twist the tabs a little less than a quarter turn. Do not twist the tabs excessively or they will shear off. Solder the capacitor tabs without a hole to the chassis at the slot in the chassis.

( ) 11. Fig. 1. Mount the surgistor RS-1, as shown. Use one #6-32 screw, one #6 ground lug and one #6 hex nut to secure this component to the chassis. Note the orientation in figure #3.

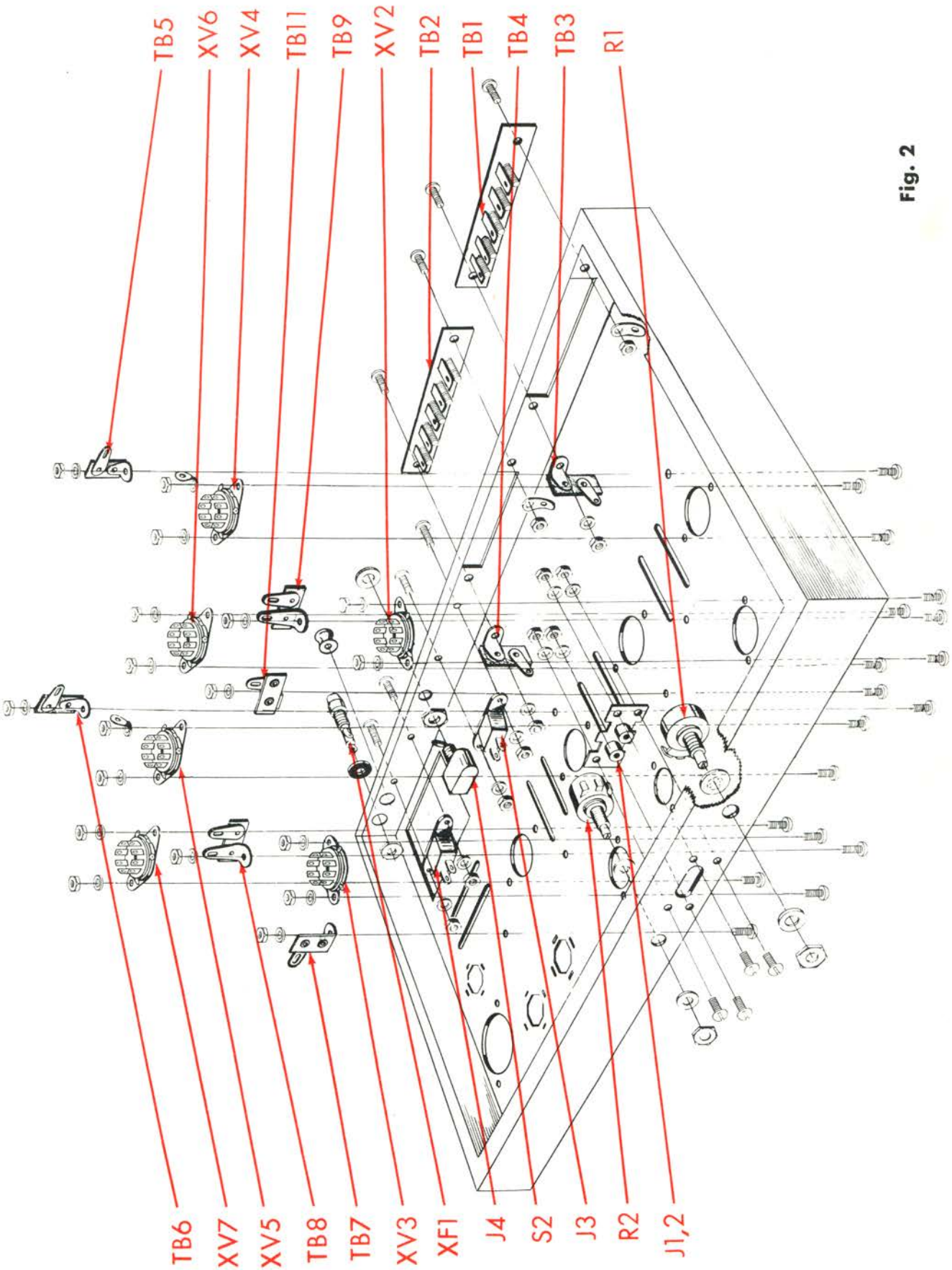
TB5
XV6
XV4
TB11
TB9
XV2
TB2
TB1
TB4
TB3
R1
TB6
XV7
XV5
TB8
TB7
XV3
XF1
J4
S2
J3
R2
J1,2

Fig. 2

BELOW CHASSIS ASSEMBLY

( ) 1. Fig. 2. On the rear apron of the chassis, mount the five screw terminal boards, TB 1 and TB 2, as shown. Use two #6-32 screws and two #6-32 hex nuts on each. Under one of the hex nuts, used for mounting each terminal board, mount a #6 ground lug. Under each of the remaining hex nuts used for securing the terminal boards TB 1 and TB 2 to the chassis, mount a 1 post left terminal strip and a #6 lockwasher. Mount terminal strip TB3 under the lockwasher and hex nut used for securing TB1 to the chassis and terminal strip TB4 under the hex nut and lockwasher used for securing TB2 to the chassis.

( ) 2. Fig. 2. Mount the two convenience outlets, J 3 and J 4, as shown. Use two #6-32 screws, two #6 lockwashers, and two #6-32 hex nuts on each.

( ) 3. Fig. 2. Mount the toggle switch S 2, using a 15/32-32 round ring nut outside the chassis and a 15/32-32 hex nut inside the chassis. Adjust the hex nut so that only 1/16" of the screw threads can be seen outside the chassis. Screw the ring nut on so that the switch is secured to the chassis and will not rotate.

( ) 4. Fig. 2. Mount fuseholder XF1, as shown. Use a thin rubber washer outside the chassis. Use a 1/2"-32 hex nut to secure the fuseholder to the chassis. Do not tighten too much or the holder will crack.

( ) 5. Fig. 2. Push a rubber grommet in the remaining hole in the rear apron of the chassis next to the fuseholder.

( ) 6. Fig. 2. Mount the 1 post upright right terminal strip, TB 5; the 1 post upright right terminal strip, TB 6; the 1 post upright right terminal strip, TB 7; the 1 post right with ground terminal strip, TB8; the one post right with ground terminal strip, TB 9; and the one post left terminal strip, TB 11, as shown. Note the orientation of each of these terminal strips in figure #3. Use one #6-32 screw, one #6 lockwasher and one #6-32 hex nut to secure each terminal strip to the chassis.

( ) 7. Fig. 2. Mount octal sockets XV2, XV3, XV4, XV5, XV6, and XV7 as shown. Note the orientation in figure #3. The number of each pin is indicated next to the pin on the bakelite portion of the socket. Use two #6-32 screws and two #6-32 hex nuts to secure each socket to the chassis. Under one nut of XV4 and one nut of XV5, mount a #6 ground lug. Under each of the remaining nuts mount a #6 lockwasher.

( ) 8. Fig. 2. Mount the dual input jack, J1, 2, as shown. Use four #4-40 screws, four #4 lockwashers, and four #4-40 hex nuts.

( ) 9. Fig. 2. Mount potentiometers, R1 and R2, as shown. Use one 3/8 lockwasher inside the chassis and one 3/8 flatwasher and a 3/8 hex nut outside the chassis to secure each potentiometer to the front apron of the chassis.

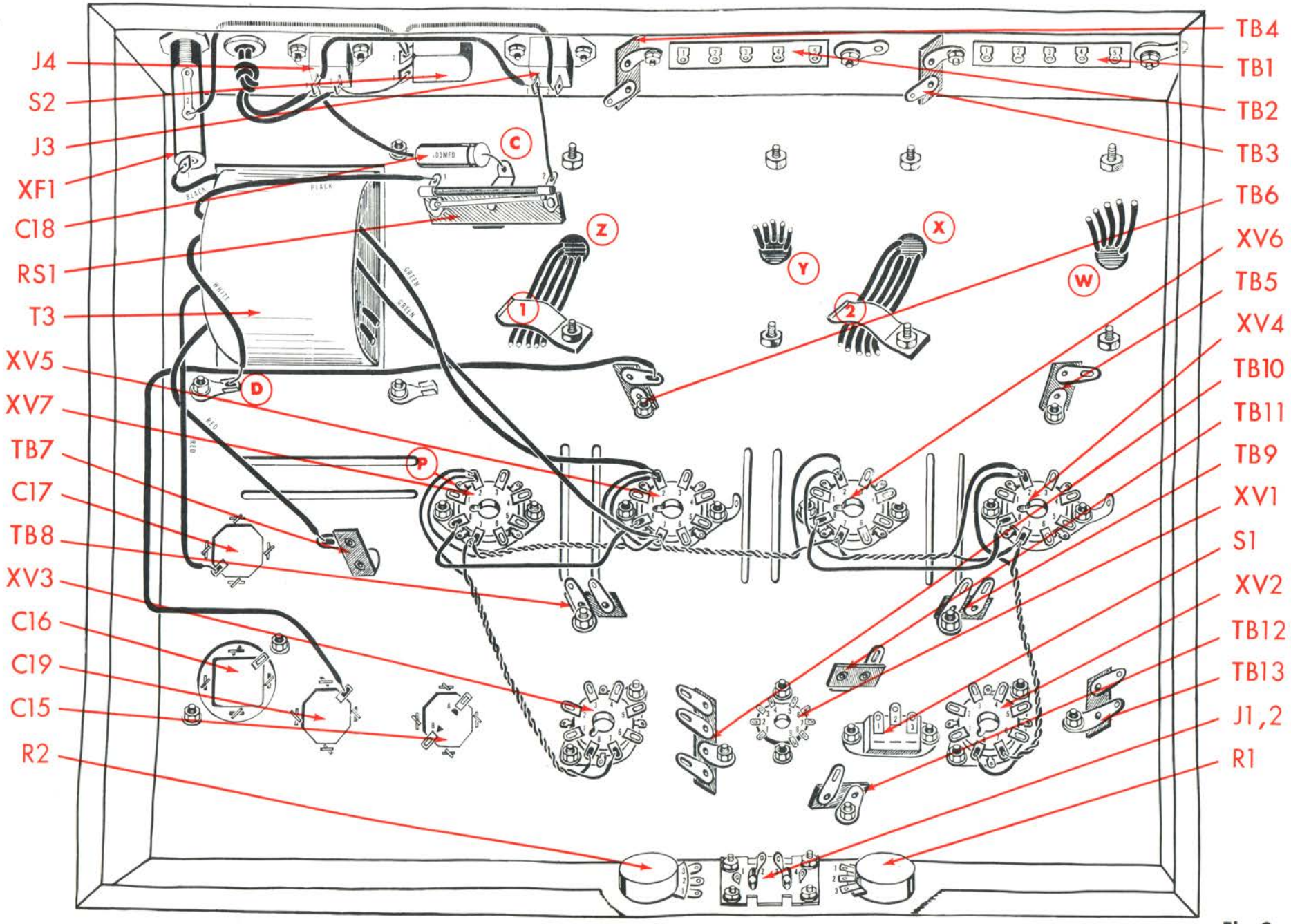
J4
S2
J3
XF1
C18
RS1
T3
XV5
XV7
TB7
C17
TB8
XV3
C16
C19
C15
R2
TB4
TB1
TB2
TB3
TB6
XV6
TB5
XV4
TB10
TB11
TB9
XV1
S1
XV2
TB12
TB13
J1,2
R1
C
.03MFD
Z
Y
X
W
1
2
D
P
BLACK
WHITE
GREEN
RED

Fig. 3

WIRING

(✓) 1. Fig. 3. Connect a 15" piece of red wire from C19 (C) to TB6 (C). Run this lead along the chassis as shown.

(✓) 2. Fig. 3. From power transformer, T-3, connect the white lead to ground lug "D" (C), the short black lead to XF1-1 (S1) and the longer black lead to RS1-1 (S1). Twist the two red leads together as shown. Connect one red lead to C17 (C) and the second red lead to TB7 (C).

(✓) 3. Fig. 3. Connect a 5" piece of gray wire from XF1-2 (S1) to S2-2 (C).

( ) 4. Fig. 3. Connect a 4" piece of gray wire from S2-2 (S2) to J3-2 (S1).

( ) 5. Fig. 3. Connect a 1 1/4" piece of bare wire from J4-2 (C) to S2-1 (S1).

( ) 6. Fig. 3. Connect a 5" piece of gray wire from J4-1 (C) to J3-1 (C).

( ) 7. Fig. 3. Connect a 2" piece of bare wire from J3-1 (S2) to RS1-2 (S1).

( ) 8. Fig. 3. Cut one lead on a .03 mfd (orange, black, orange, black, blue) molded capacitor C18 to 1 1/4". Cover this lead with a 1" piece of spaghetti and connect it to J4-1 (C). Cut the second lead to 3/4" and connect it to ground lug "C" (S1).

( ) 9. Fig. 3. Connect one end of a six inch piece of yellow wire to XV4-2 (C) and one end of a 5" piece of brown wire to XV4-7 (C). Twist the two leads together and run them along the chassis as shown. Connect the other end of the yellow wire to XV2-7 (S1) and the other end of the brown wire to XV2-8 (S1).

( ) 10. Fig. 3. Connect one end of a 7" piece of yellow wire to XV4-2 (S2) and one end of a 4" piece of brown wire to XV4-7 (S2). Twist the two leads together and run them along the chassis as shown. Connect the remaining end of the yellow wire to XV6-2 (C) and the other end of the brown wire to XV6-7 (C).

( ) 11. Fig. 3. Connect one side of a 7" piece of yellow wire to XV6-2 (S2) and one side of a 4" piece of brown wire to XV6-7 (S2). Twist the leads together and run them along the chassis as shown. Connect the other end of the yellow wire to XV5-2 (C) and the other end of the brown wire to XV5-7 (C).

( ) 12. Fig. 3. Connect one end of a 7" piece of yellow wire to XV5-2 (C) and one end of a 4" piece of brown wire to XV5-7 (C). Twist the two leads together and run them along the chassis as shown. Connect the other end of the yellow wire to XV7-2 (C) and the other end of the brown wire to XV7-7 (C).

( ) 13. Fig. 3. Connect one end of a 8" piece of yellow wire to XV7-2 (C) and one end of a 7" piece of brown wire to XV7-7 (S2). Twist the two leads together and run them along the chassis as shown. Connect the other end of the brown wire to XV3-8 (S1) and the other end of the yellow wire to XV3-7 (S1).

( ) 14. Fig. 3. Connect a 3/4" piece of bare wire from XV7-2 (S3) to ground lug "P" (S1) at XV7.

( ) 15. Fig. 3. Connect a 4 1/2" piece of orange wire from XV7-8 (C) to XV5-8 (C).

( ) 16. Fig. 3. Connect a 4 1/2" piece of orange wire from XV6-8 (C) to XV4-8 (C).

( ) 17. Fig. 3. From power transformer T 3 twist the two green leads together. Run them along the chassis as shown. Connect one green lead to XV5-2 (S3) and the other green lead to XV5-7 (S3).

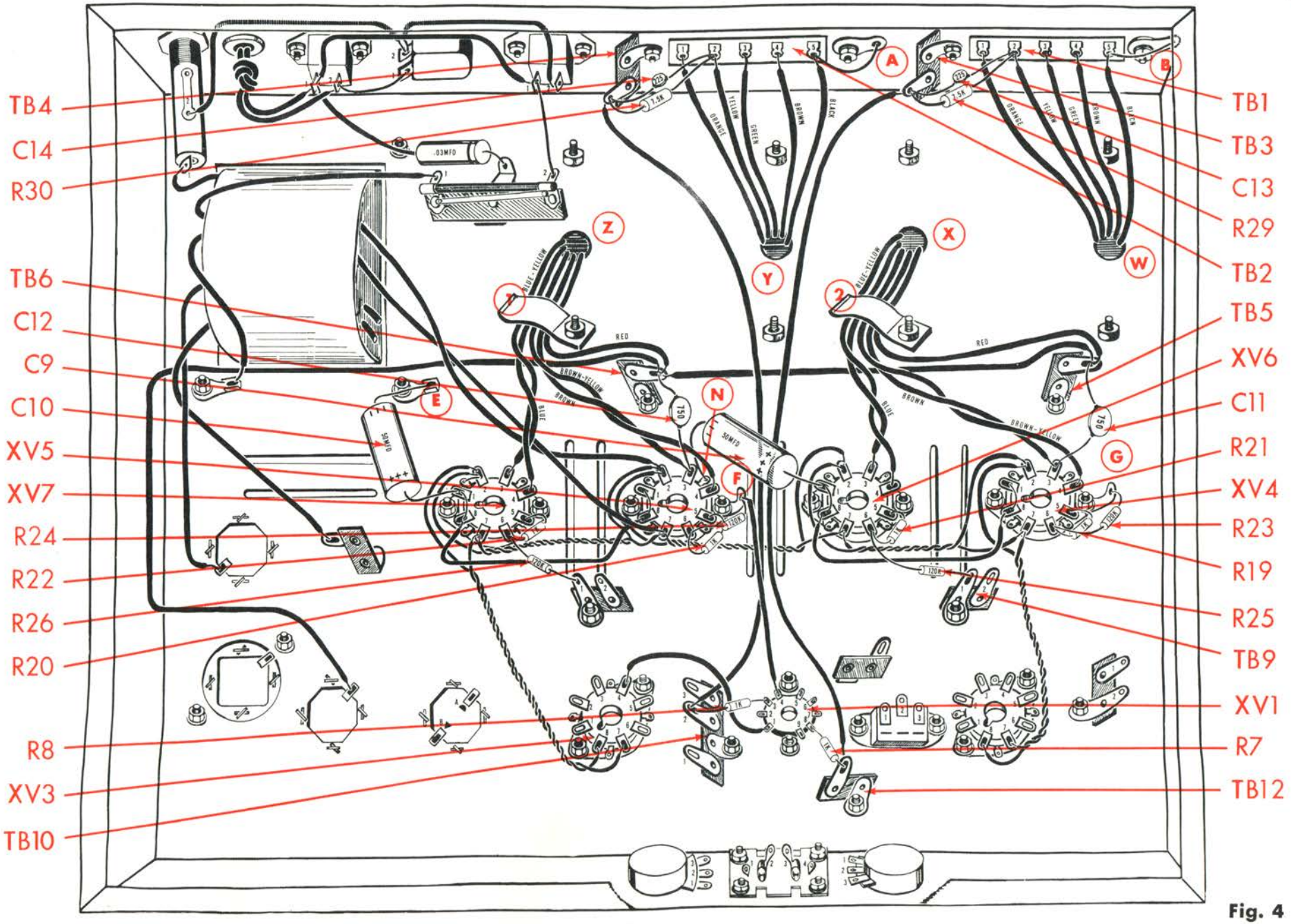
TB4
C14
R30
TB6
C12
C9
C10
XV5
XV7
R24
R22
R26
R20
R8
XV3
TB10
TB1
TB3
C13
R29
TB2
TB5
XV6
C11
R21
XV4
R23
R19
R25
TB9
XV1
R7
TB12
A
B
W
X
Y
Z
E
F
G
N
.03MFD
50MFD
750
120K
1K
7.5K
225
ORANGE
YELLOW
GREEN
BROWN
BLACK
BLUE-YELLOW
RED
BROWN-YELLOW
BLUE

Fig. 4

( ) 1. Fig. 4. Connect a 1 1/2" piece of bare wire from TB2-5 (C) to ground lug "A" (S1).

( ) 2. Fig. 4. Connect a 1 1/2" piece of bare wire from TB1-5 (C) to ground lug "B" (S1).

( ) 3. Fig. 4. From hole W, connect the black lead to TB1-5 (S2), the brown lead to TB1-4 (S1), the green lead to TB1 3 (S1), the yellow lead to TB1-2 (C) and the orange lead to TB1-1 (S1).

( ) 4. Fig. 4. From hole "Y" connect the black lead to TB2-5 (S2), the brown lead to TB2-4 (S1), the green lead to TB2-3 (S1), the yellow lead to TB2-2 (C) and the orange lead to TB2-1 (S1).

( ) 5. Fig. 4. Connect a 7" piece of red wire from TB6 (C) to TB5 (C).

( ) 6. Fig. 4. The leads from hole "Z" have been run under cable clamp #1. Run the leads from cable clamp #1 as shown. Connect the red lead to TB6 (C), the brown lead to XV5-3 (C), the brown-yellow lead to XV5-4 (S1), the blue lead to XV7-3 (S1) and the blue-yellow lead to XV7-4 (S1).

( ) 7. Fig. 4. The leads from hole "X" have been run under cable clamp #2. Run these leads from cable clamp #2 along the chassis as shown. Connect the red lead to TB5 (C), the brown-yellow lead to XV4-4 (S1) the brown lead to XV4-3 (C) the blue lead to XV6-3 (S1) and the blue-yellow lead to XV6-4 (S1).

( ) 8. Fig. 4. Cut all leads on two 7.5K (violet, green, red, gold) 5% resistors, R29 and R30, to 3/4". Connect one resistor R29, from TB1-2 (C) to TB3 (C). Connect the second resistor R30 from TB2-2 (C) to TB4 (C).

( ) 9. Fig. 4. Cut all leads on two 225 mmf disc capacitors, C13 and C14 to 1". Connect C13 from TB1-2 (S3) to TB3 (C). Connect C14 from TB2-2 (S3) to TB4 (C). Dress the leads of C13, C14, R29 and R30 so that they do not short against TB1-1 and TB2-1.

( ) 10. Fig. 4. Connect an 11" piece of gray wire from TB3 (S3) to TB12 (C).

( ) 11. Fig. 4. Connect an 11" piece of gray wire from TB4 (S3) to TB10-2 (C).

( ) 12. Fig. 4. Cut all leads on two 750 mmf disc capacitors, C11 and C12 to 1 1/4". Connect C11 from TB5 (S3) to XV4-3 (S2). Connect C12 from TB6 (S4) to XV5-3 (S2).

( ) 13. Fig. 4. Connect a 4 1/2" piece of green wire from XV3-4 (C) to XV1-1 (S1).

( ) 14. Fig. 4. Cut all leads on six 1K (brown, black, red, silver) resistors R7, R8, R19, R20, R21 and R22 to 1/2". Connect R7 from TB12 (C) to XV1-8 (C). Connect R8 from TB10-2 (C) to XV1-3 (C). Connect R20 from XV5-5 (S1) to XV5-6 (C). Connect R22 from XV7-5 (S1) to XV7-6 (C), R21 from XV6-5 (S1) to XV6-6 (C) and R19 from XV4-5 (S1) to XV4-6 (C),

( ) 15. Fig. 4. Cut all leads on four 120K (brown, red, yellow, silver) resistors R23, R24, R25 and R26, to 3/4". Connect R23 from XV4-6 (C) to ground lug "G" (S1). Connect R25 from XV6-6 (C) to TB9-1 (C). Connect R24 from XV5-6 (C) to ground lug "F" (C). Connect R26 from XV7-6 (C) to TB8-1 (C).

( ) 16. Fig. 4. Connect a 3/4" piece of bare wire from XV4-1 (S1) to XV4-8 (S2).

( ) 17. Fig. 4. Connect a 3/4" piece of bare wire from XV6-1 (C) to XV6-8 (C).

( ) 18. Fig. 4. Connect a 3/4" piece of bare wire from XV5-1 (S1) to XV5-8 (S2).

( ) 19. Fig. 4. Connect a 3/4" piece of bare wire from XV7-1 (C) to XV7-8 (C).

( ) 20. Fig. 4. Cut all leads on two 50 mfd 50 volt electrolytic capacitors, C9 and C10, to 3/4". Connect the positive end of C9 to XV6-1 (S2) and the remaining lead to ground lug "N" (S1) at XV5. Connect the positive end of C10 to XV7-1 (S2) and the remaining lead to ground lug "E" (S1).

( ) 21. Fig. 4. Connect a 4" piece of grey wire from XV1-4 (S1) to ground lug "F" (S2).

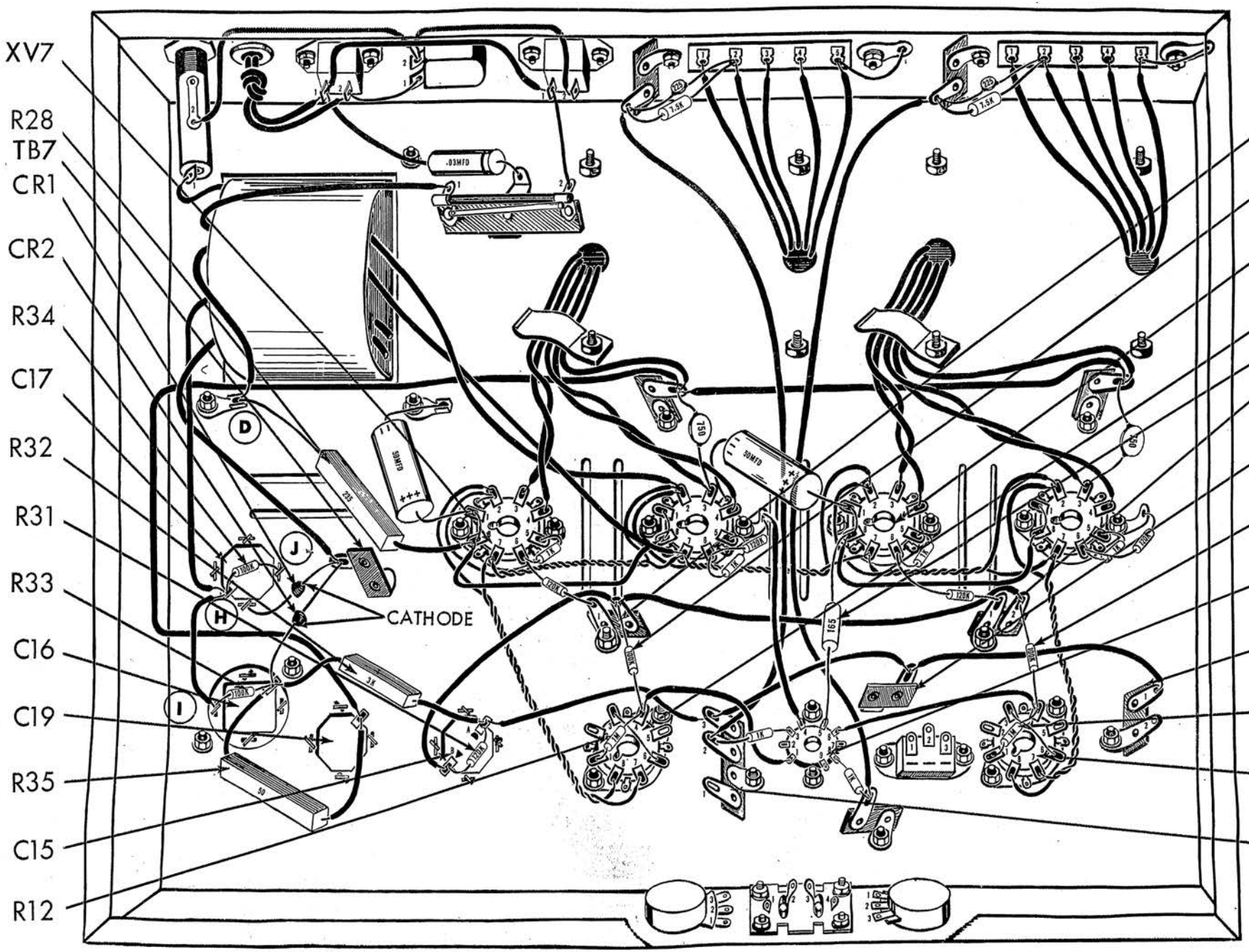
XV7
R28
TB7
CR1
CR2
R34
C17
R32
R31
R33
C16
C19
R35
C15
R12
TB8
R6
XV6
XV3
R27
TB9
TB11
R5
XV1
TB13
R11
XV2
TB10
CATHODE
D
J
H
I
.03MFD
50MFD
225
7.5K
750
165
120K
100K
1K
3K
50

Fig. 5

( ) 1. Fig. 5. Cut both leads on a 235Ω 10 watt wire wound resistor, R28, to 1 1/4". Cover one lead with a 1" piece of spaghetti and connect to XV7-8 (S3). Connect the remaining lead to ground lug "D" (S2).

( ) 2. Fig. 5. Cut both leads on a 165Ω 5 watt wire wound resistor, R27, to 1". Connect from XV6-8 (S3) to XV1-5 (S1). Dress the adjacent leads away from R27.

( ) 3. Fig. 5. Connect a 3" piece of red wire from C17 (C) to lug "I" at C16 (C).

( ) 4. Fig. 5. Cut all leads on two 100K (brown, black, yellow, silver) resistors, R33 and R34, to 1/2". Connect R33 from C16 (C) to lug "I" (S2) at C16. Do not short lug to chassis ground. Connect R34 from C17 (S3) to lug "J" (S1) at C17.

( ) 5. Fig. 5. Cut both leads on a 50Ω 10 watt wire wound resistor R35, to 1 1/4". Cover each lead with a 1" piece of spaghetti. Connect from C16 (C) to C19 (S2).

( ) 6. Fig. 5. Connect a 6" piece of orange wire from C15-B (C) to TB8-2 (C).

( ) 7. Fig. 5. Cut both leads on a 3000Ω, 5 watt, wire wound resistor, R32, to 1 1/2". Cover each lead with a 1 1/4" piece of spaghetti, connect from C16 (C) to C15-A (C).

( ) 8. Fig. 5. Connect a 7" piece of orange wire from TB8-2 (C) to TB9-2 (C).

( ) 9. Fig. 5. Connect a 5" piece of red wire from C15-A (C) to TB10-3 (C).

( ) 10. Fig. 5. Connect a 4" piece of red wire from TB10-3 (C) to TB11 (C).

( ) 11. Fig. 5. Connect a 4" piece of red wire from TB11 (C) to TB13-1 (C).

( ) 12. Fig. 5. You have been supplied in your kit with two silicon rectifiers, CR1 and CR2. Note that excessive heat on the leads of these rectifiers can ruin them. When you solder be careful not to apply any excessive heat to the junctions.

While soldering, place a pair of long nose pliers on the lead between the soldered junction and the rectifier to conduct the heat away from the iron so that the heat will not reach the rectifier. With this precaution in mind, you are now ready to wire your rectifiers into the circuit. The rectifier may take different shapes. The various shapes are indicated in the introductory section to this instruction book. In this same section of the book you will also find the side which is the cathode of the rectifier. Do not cut the leads on either rectifiers. Place a piece of spaghetti over the cathode lead of each rectifier. The piece of spaghetti should be of the right length so that 1/4" of lead sticks out from the spaghetti. This 1/4" extension is to be used in making a mechanical connection to the solder lugs. Connect the spaghetti covered cathode lead of CR1 to C16 (S4) and the other lead to TB7 (C). Connect the spaghetti covered cathode lead of CR2 to TB7 (S3) and the other lead to ground lug "H" (S1) at C17.

( ) 13. Fig. 5. Connect a 4" piece of green wire from XV1-6 (S1) to XV2-4 (C).

( ) 14. Fig. 5. Cut both leads on a 120K (brown, red, yellow, silver) resistor R31, to 1/2". Connect from C15-B (S2) to C15-A (C).

( ) 15. Fig. 5. Cut all leads on two 100K (brown, black, yellow, silver) resistors, R5 and R6, to 3/4". Connect R5 from XV2-4 (C) to TB9-2 (S2). Connect R6 from XV3-4 (C) to TB8-2 (S3).

( ) 16. Fig. 5. Connect a 1 1/2" piece of bare wire from XV2-3 (C) to XV2-6 (S1).

( ) 17. Fig. 5. Connect a 1 1/2" piece of bare wire from XV3-3 (C) to XV3-6 (S1).

( ) 18. Fig. 5. Cut all leads on two 1 meg (brown, black, green, silver) resistors, R11 and R12, to 1/2". Connect R11 from XV2-1 (C) to XV2-4 (S3). Connect R12 from XV3-1 (C) to XV3-4 (S3).

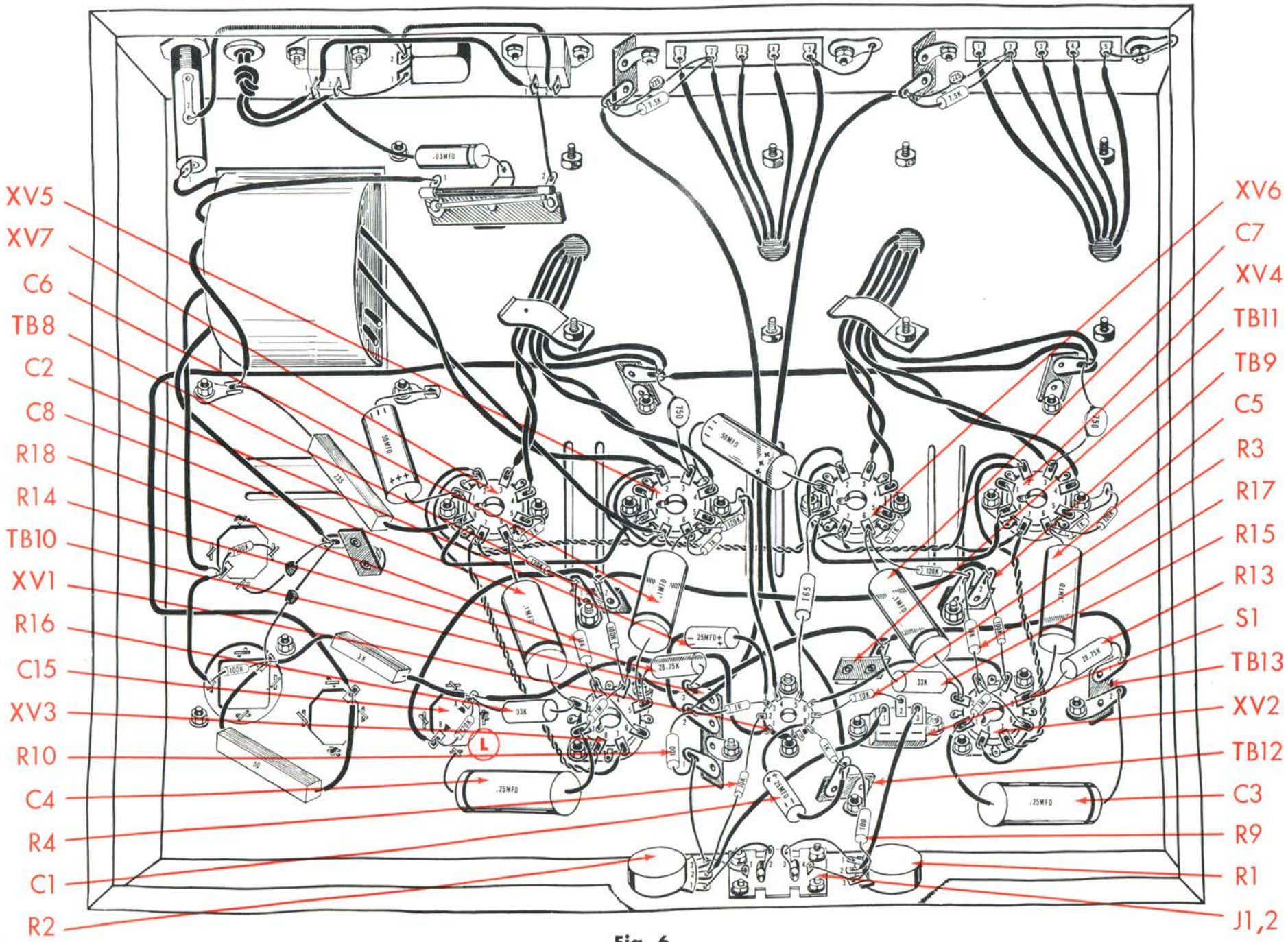
XV5
XV7
C6
TB8
C2
C8
R18
R14
TB10
XV1
R16
C15
XV3
R10
C4
R4
C1
R2
XV6
C7
XV4
TB11
TB9
C5
R3
R17
R15
R13
S1
TB13
XV2
TB12
C3
R9
R1
J1,2

Fig. 6

( ) 1. Fig. 6. Connect a 1 1/4" piece of bare wire from R2-3 (C) to TB10-1 (C).

( ) 2. Fig. 6. Connect a 1 1/4" piece of bare wire from J1, 2-1 (S1) to R2-3 (S2).

( ) 3. Fig. 6. Connect a 1 1/2" piece of bare wire from J1, 2-2 (S1) to R2-1 (S1).

( ) 4. Fig. 6. Connect a 1 1/4" piece of bare wire from J1, 2-4 (S1) to R1-3 (C).

( ) 5. Fig. 6. Connect a 1 1/4" piece of bare wire from J1, 2-3 (S1) to R1-1 (S1).

( ) 6. Fig. 6. Connect a 3" piece of green wire from R1-2 (S1) to S1-3 (S1).

( ) 7. Fig. 6. Connect a 4" piece of green wire from R2-2 (C) to S1-1 (S1).

( ) 8. Fig. 6. Cut both leads on a 25mfd 6 volt electrolytic capacitor, C1, to 1". Cover each lead with a 3/4" piece of spaghetti. Connect the positive lead to XV1-8 (S2) and the negative lead to TB12 (C).

( ) 9. Fig. 6. On the other 25mfd 6 volt electrolytic capacitor C2, cut the positive lead to 3/4". Cover this lead with a 1/2" piece of spaghetti and connect to XV1-3 (S2). Cut the remaining lead to 1 1/4" and cover it with a 1" piece of spaghetti. Connect this lead to TB10-2 (C).

( ) 10. Fig. 6. Cut all leads on two 100Ω (brown, black, brown, gold) 5% resistors, R9 and R10, to 1/2". Connect R9 from TB12 (S4) to R1-3 (S2). Connect R10 from TB10-1 (S2) to TB10-2 (S4).

( ) 11. Fig. 6. Cut one lead of the 10K (brown, black, orange, silver) resistor R3 to 1/2" and the remaining lead to 1". Connect the shorter lead to XV1-7 (S1) and the longer lead to S1-2 (S1).

( ) 12. Fig. 6. Cut one lead on the 10K (brown, black, orange, silver) resistor, R4, to 1/2" and the remaining lead to 1 1/4". Connect the shorter lead to XV1-2 (S1) and the longer lead to R2-2 (S2).

( ) 13. Fig. 6. Cut all leads on two .25 mfd (red, green, yellow, white, yellow) 400 volt molded capacitors, C3 and C4, to 1 1/4". Cover one lead of C3 with a 1" piece of spaghetti and connect to XV2-1 (S2). Connect the remaining lead to TB13-2 (S1). Cover one lead of C4 with a 1" piece of spaghetti and connect to XV3-1 (S2). Connect the remaining lead to ground lug "L" (S1), at C15.

( ) 14. Fig. 6. Cut all leads on two 18K (brown, grey, orange, gold) 5%, 1 watt resistors R17 and R18, to 3/4". Connect R17 from XV2-3 (S2) to TB9-1 (S2). Connect R18 from XV3-3 (S2) to TB8-1 (S2).

( ) 15. Fig. 6. Cut all leads on two 28.75K (red, grey, grey, gold) 5%, 1 watt resistors, R13 and R14, to 1/2". Connect R13 from TB13-1 (S2) to XV2-5 (C). Connect R14 from XV3-5 (C) to TB10-3 (S3).

( ) 16. Fig. 6. Cut all leads on two 33K (orange, orange, orange, gold) 5%, 1 watt resistors, R15 and R16, to 3/4". Connect R15 from XV2-2 (C) to TB11 (S3). Connect R16 from XV3-2 (C) to C15A (S4).

( ) 17. Fig. 6. Cut all leads on four .1 mfd (brown, black, yellow, white, blue) molded capacitors, C5, C6, C7, and C8, to 1". Connect C5 from XV2-5 (S2) to XV4-6 (S3). Connect C7 from XV2-2 (S2) to XV6-6 (S3). Connect C6 from XV3-5 (S2) to XV5-6 (S3). Connect C8 from XV3-2 (S2) to XV7-6 (S3).

( ) 18. Fig. 6. Push the end of the line cord with tinned leads through the rubber grommet at the rear of the chassis. Tie a knot in the line cord 2" from the tinned ends. This knot is to be tied inside the chassis so that the line cord cannot pull through the grommet. Connect one of the tinned leads to J4-2 (S2) and the remaining tinned lead to J4-1 (S3).

FINAL STEPS

You have now completed the assembly and wiring of your amplifier. When you have completed the following steps your amplifier will be ready for use.

( ) 1. To catch any wiring errors, it is suggested that the entire wiring be checked point-by-point against the wiring instructions (and preferably also against the schematic wiring diagram in order to become more familiar with the component layout and circuitry). While doing so, check for rosin joints, loose lumps of solder, poor lead dress, and accidental shorts or leakage paths arising from the flow of rosin between contacts (remove with a stiff brush dipped in carbon tetrachloride, being careful not to inhale fumes or to contact the carbon tetrachloride with your skin).

( ) 2. Insert tubes V1 through V7 in their sockets. Be sure to insert the correct tube in each socket. Place a shield over tube V1. Insert fuse F1 in fuseholder. DO NOT PLUG CORD INTO POWER LINE.

( ) 3. If you have a VTVM or VOM, make the following resistance checks before connecting to the a-c line: Check for a cold d-c resistance of at least 80 ohms across the a-c line plug. Check for a resistance of at least 25,000 ohms between ground and each red lead from the power transformer and between ground and the positive terminal of each 300 mfd capacitor. Note that the negative lead from the meter is to be connected to ground during the latter measurements. Allow sufficient time for the electrolytic capacitors to be charged by the ohmmeter battery in these last measurements. These measurements constitute a reasonable check of the power supply components and wiring before applying power. If you do not obtain the minimum resistance values indicated, do not proceed to the next step until the cause is discovered and the condition remedied.

When you turn the HF-87 "on" for the first few times it is normal for the Surgistor to get hot and smoke slightly. If it glows red hot, you have a short in the power supply and should immediately turn the unit off.

( ) 4. Press a No. 8 tinnerman speed nut in place over each hole on the bottom flange of the chassis. (See Figure 7).

( ) 5. If the amplifier is not going to be fastened to some surface, insert the rubber feet in the openings provided in the bottom plate and mount the bottom plate of the chassis, using 10 No. 8-32 screws. If the amplifier is to be fastened to a surface, the feet will not be used and the bottom plate will be required as a template before it is attached to the amplifier.

( ) 6. Read the MECHANICAL INSTALLATION and ELECTRICAL INSTALLATION sections of the instruction book carefully, and install and connect the amplifier according to the information given.

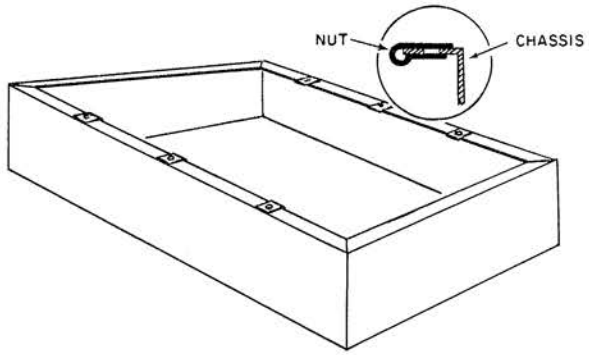

Figure 7. Location of Bottom Plate Speed Nuts

SERVICE

If you are still having difficulty, write to our service department listing all possible indications that might be helpful. Note the code number appearing in red under the word "Manual" on the front cover. If there is no number, state this. If desired, you may return the instrument to our factory where it will be placed in operating condition for $8.00 plus the cost of parts replaced due to their being damaged in the course of construction. This service policy applies only to completed instruments constructed in accordance with the instructions as stated in the manual. Instruments that are not completed or instruments that are modified will not be accepted for repair. Instruments that show evidence of acid core solder or paste fluxes will be returned not repaired. NOTE: Before returning this unit, be sure all parts are securely mounted. Attach a tag to the instrument, giving your home address and the trouble with the unit. Pack very carefully in a rugged container, using sufficient packing material (cotton, shredded newspaper, or excelsior), to make the unit completely immovable within the container. The original shipping carton is satisfactory, providing the original inserts are used or sufficient packing material is inserted to keep the instrument immovable. Ship by prepaid Railway Express, if possible, to the Electronic Instrument Co., Inc., 33-00 Northern Blvd., L.I.C. 1, New York. Return shipment will be made by express collect. Note that the carrier cannot be held liable for damages in transit if packing, IN HIS OPINION, is insufficient.

REPLACEMENT PARTS LIST

Stock #	Sym.	Description	Am't.
23020	C1, 2	cap., elec., 25mfd, 6V	2
20044	C3, 4	cap., molded, .25mfd, 400V	2
20040	C5, 6, 7, 8	cap., molded, .1mfd, 600V, ±10%	4
23011	C9, 10	cap., elec., 50mfd, 50V	2
22542	C11, 12	cap., disc, 750mmf, 1000V, ±10%	2
22543	C13, 14	cap., disc, 225mmf, ±10%	2
24008	C15	cap., elec., 40-20mfd, 500V	1
24013	C16, 17	cap., elec., 300mfd, 300V	2
20043	C18	cap., molded, .03mfd, 600V	1
24014	C19	cap., elec., 80mfd, 500V	1
93006	CR1, 2	rectifier, silicon, 750ma, 600 PIV	2
91001	F1	fuse, 5 AMP	1
50011	J1-2	jack, dual input	1
50016	J3, 4	convenience outlet	2
18050	R1, 2	pot., 500KΩ, slotted shaft, audio taper	2
10400	R3, 4	res., 10KΩ, 1/2W, ±10% (brown, black, orange, silver)	2
10410	R5, 6, 33, 34	res., 100KΩ, 1/2W, ±10% (brown, black, yellow, silver)	4
10432	R7, 8, 19, 20, 21, 22	res., 1KΩ, 1/2W, ±10% (brown, black, red, silver)	6
11505	R9, 10	res., 100Ω, 1/2W, ±5% (brown, black, brown, gold)	2
10407	R11, 12	res., 1MΩ, 1/2W, ±10% (brown, black, green, silver)	2
11601	R13, 14	res., 28.75KΩ, 1W, ±5%	2
11602	R15, 16	res., 33KΩ, 1W, ±5% (orange, orange, orange, gold)	2
11600	R17, 18	res., 18KΩ, 1W, ±5% (brown, grey, orange, gold)	2
10444	R23, 24, 25, 26, 31	res., 120KΩ, 1/2W, ±10% (brown, red, yellow, silver)	5
14600	R27	res., 165Ω, 5W, ±5%	1
14305	R28	res., 235Ω, 10W, ±10%	1
11517	R29, 30	res., 7.5KΩ, 1/2W, ±5% (violet, green, red, gold)	2
14505	R32	res., 3K, 5W, ±10%	1
14306	R35	res., 50Ω, 10W, ±10%	1
39001	RS1	surgistor	1
62002	S1	switch, slide, SPDT	1
61000	S2	switch, toggle, SPST	1
32019	T1, 2	transformer, output	2
30031	T3	transformer, power	1
54516	TB1, 2	terminal board, 5 screw	2
54000	TB3, 4, 11, 12	terminal strip, 1 post left	4
54017	TB5, 6, 7	terminal strip, upright, 1 post right	3
54002	TB8, 9	terminal strip, 1 post right w/gnd.	2
54006	TB10	terminal strip, 3 post, 2 right	1
54013	TB13	terminal strip, 1 post left w/gnd.	1
90034	V1	tube, 12AX7/7025/ECC83	1
90041	V2, 3	tube, 6SN7GTB	2
90040	V4, 5, 6, 7	tube, 6CA7/EL34	4
97800	XF1	fuseholder	1
97027	XV1	socket, 9 pin min., top mount	1
97032	XV2, 3, 4, 5, 6, 7	socket, octal	6
40000	nut, hex, 6-32		34
40001	nut, hex, 3/8		2
40002	nut, hex, 15-32		1
40003	nut, ring, 15-32		1
40007	nut, hex, #4-40		6
40008	nut, hex, 8-32		4
40012	nut, hex, 10-32		8
40016	nut, hex, 1/2-24		1
40017	nut, tinnerman #8		10
41000	screw, 6-32 x 1/4		34
41003	screw, 8-32 x 3/8		10
41016	screw, 4-40 x 1/4		6
41028	screw, 8-32 x 1		4
41044	screw, 10-32 x 3/8		8
42000	washer, lock, 3/8		2
42001	washer, flat, 3/8		2
42002	washer, lock, #6		34
42004	washer, lock, #10		8
42007	washer, lock, #4		6
42008	washer, lock, #8		4
42011	washer, flat, #10-5		8
42029	washer, rubber, 1/2 ID		1
43000	ground lug, #6		5
43004	ground lug, #8		2
46000	grommet, 3/8		1
46006	feet, rubber		4
51006	plug, RCA phono		2
57000	line cord		1
58004	wire, hookup, #22 solid		length
58300	spaghetti		length
58501	wire, bare #22		length
59508	capacitor mounting plate (various colors)		1
81207	chassis		1
81208	bottom plate		1
81903	cable clamp		2
97300	tube shield		1
66085	Instruction Manual		1
66339	Construction Manual (kit only)		1

VOLTAGE & RESISTANCE CHART

TUBE	PIN#	DC VOLTS NO SIGNAL	DC VOLTS 70 WATTS	AC VOLTS (1kc) .38 VOLTS INPUT	RESISTANCE, Ω UNIT OFF
12AX7/ECC83	1	138	137	3.6	223K
	2	0	0	.38	510K
V1	3	1.2	1.2	.31	1.1K
	4	0	0	0	0
	5	10.5	11.5	.03	15Ω
	6	138	137	3.6	223K
	7	0	0	.38	510K
	8	1.2	1.2	.31	1.1K
	9	5.2	5.8	.015	7.5Ω
6SN7GTB	1	130	127	.0025	1.22M
V2, V3	2	335	330	24	36K
	3	147	146	1.7	18K
	4	138	137	3.6	223K
	5	340	335	24	32K
	6	147	146	1.7	18K
	7	filament (ground potential)			
	8	filament (6.3VAC to pin 7)			
EL34/6CA7	1	34	37	.1	235Ω
	2	filament (ground potential)			
V4, V5, V6, V7	3	475	430	270	130Ω - 155Ω
	4	478	472	113	55Ω - 65Ω
	5	0	0	24	121K
	6	0	0	24	120K
	7	filament (6.3VAC to pin 2)			
	8	34	37	.1	235Ω

TROUBLE-SHOOTING PROCEDURES

SYMPTOM	CAUSE	REMEDY
House power line fuse blows; fuse, F1, remains intact.	Short in line cord, J3, J4 or associated equipment plugged into J3 or J4.	Repair
Fuse, F1, blows.	Check CR1, CR2, C16, C17, C19 or short between insulated tabs on C16 and chassis.	Check and repair or replace.
Any or all tube filaments not lit, except V1	Open lead from 6.3V winding of T3. 6.3V winding of T3 open.	Repair Replace T3
V1 filament not lit.	No B+. Defective V4 and V6	See below and repair Replace
DC voltage at red lead of T2 or T3 is incorrect as specified below.		
a) No voltage	Defective CR1 or CR2. C16 or C17 shorted internally or externally. Connection to C16 broken.	Replace Replace or repair Repair
b) High voltage	Output tubes V4 and V6 or V5 and V7 over-biased or not drawing current. Open filament on V1.	See trouble-shooting typical stage. Replace
c) Low voltage	Excessive current drain in amplifier. Defective CR1 or CR2. Surgistor not closing completely after 60 seconds.	See trouble-shooting typical stage. Replace Repair or replace.

NOTE: A slight red glow on the plates of the EL34 tubes is normal and does not indicate any overload.

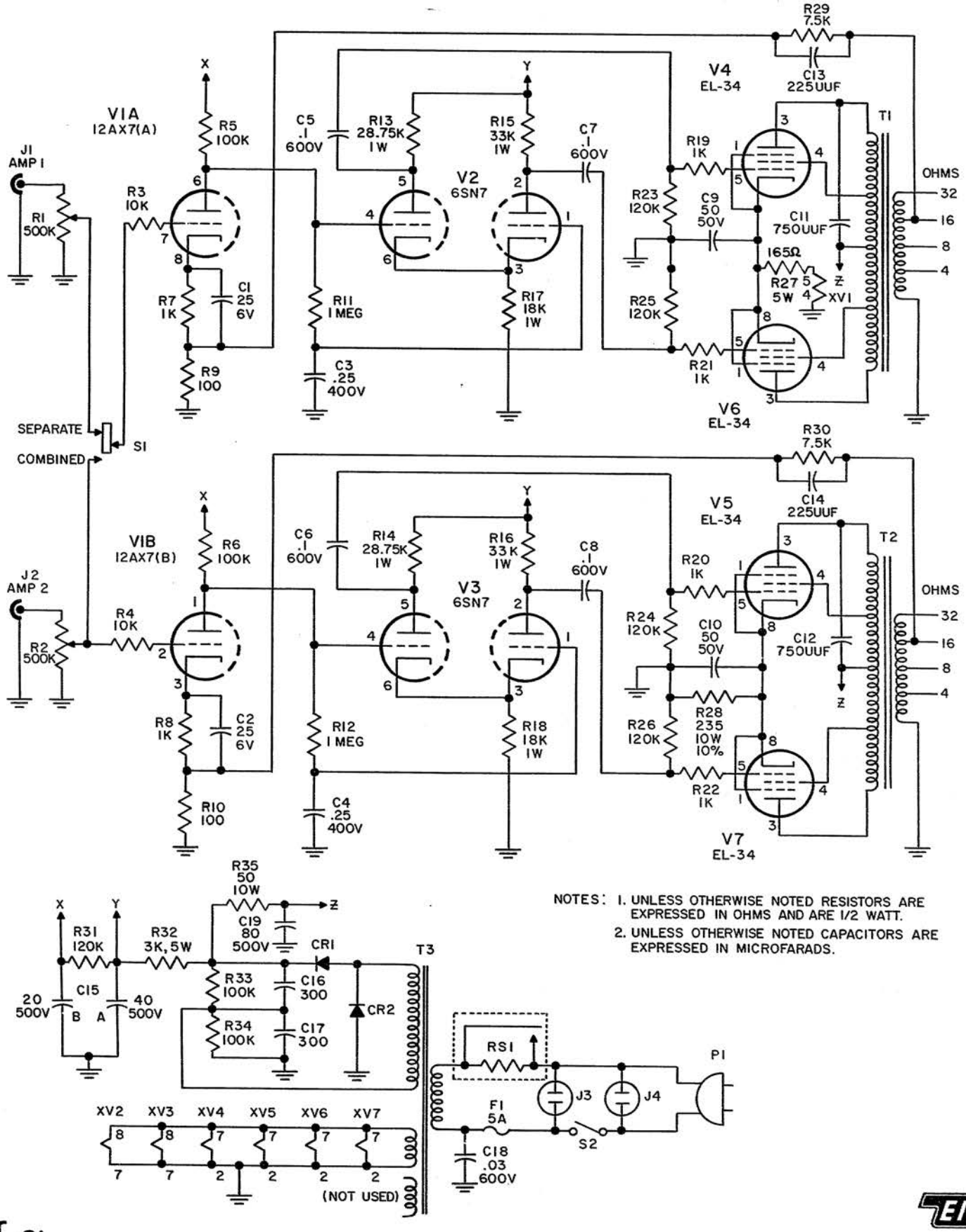

NOTES: 1. UNLESS OTHERWISE NOTED RESISTORS ARE EXPRESSED IN OHMS AND ARE 1/2 WATT.

2. UNLESS OTHERWISE NOTED CAPACITORS ARE EXPRESSED IN MICROFARADS.

EICO

MODEL HF 87 STEREO DUAL POWER AMPLIFIER

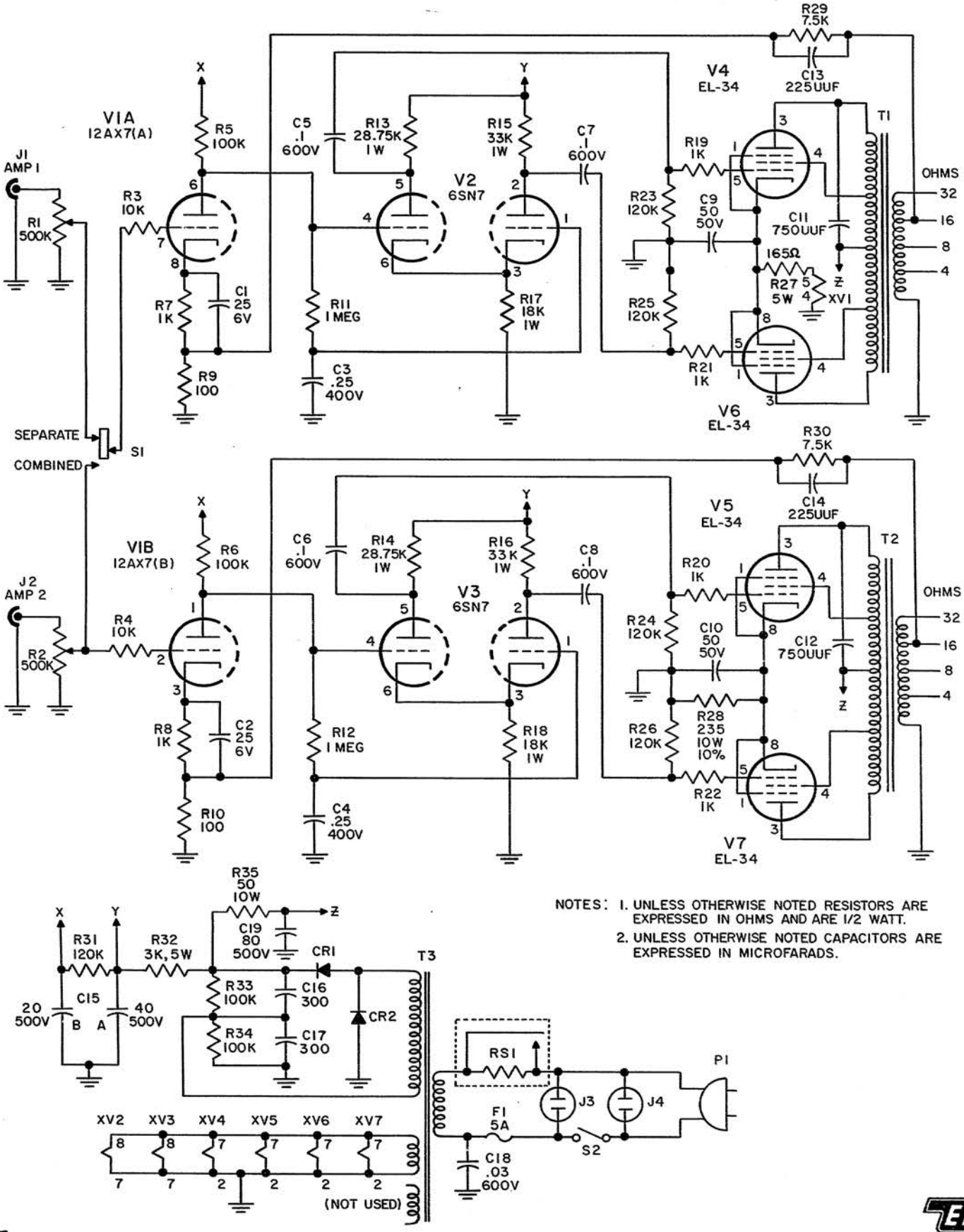

NOTES: 1. UNLESS OTHERWISE NOTED RESISTORS ARE EXPRESSED IN OHMS AND ARE 1/2 WATT.

2. UNLESS OTHERWISE NOTED CAPACITORS ARE EXPRESSED IN MICROFARADS.

EICO

MODEL HF 87 STEREO DUAL POWER AMPLIFIER

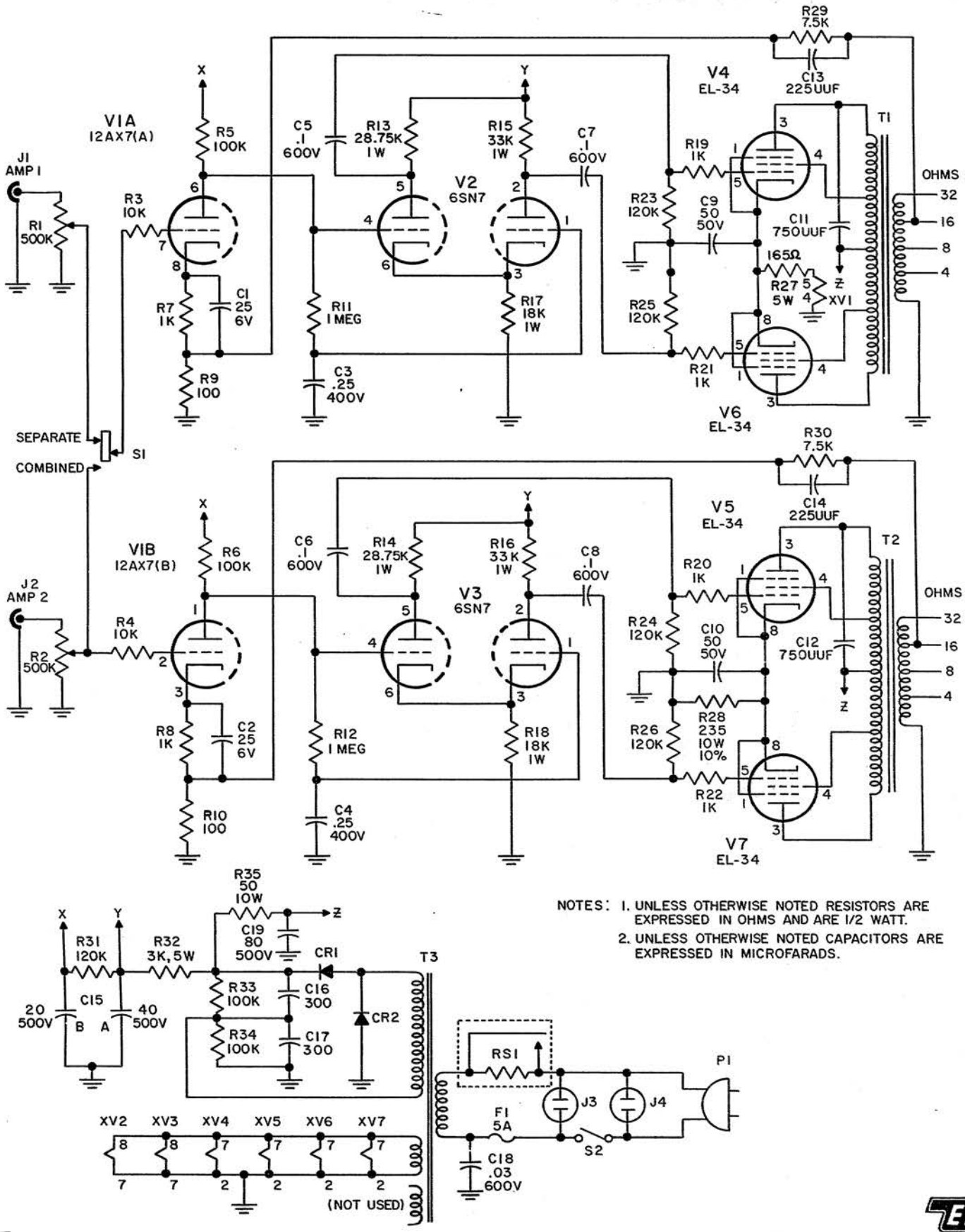

NOTES: 1. UNLESS OTHERWISE NOTED RESISTORS ARE EXPRESSED IN OHMS AND ARE 1/2 WATT.

2. UNLESS OTHERWISE NOTED CAPACITORS ARE EXPRESSED IN MICROFARADS.

EICO

MODEL HF 87 *STEREO DUAL POWER AMPLIFIER*

CAPACITOR COLOR CODES

RMA 3-DOT COLOR CODE FOR MICA-DIELECTRIC CAPACITORS

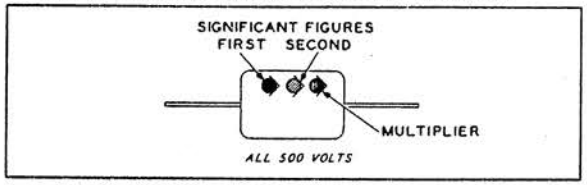

JAN 6-DOT COLOR CODE FOR PAPER-DIELECTRIC CAPACITORS

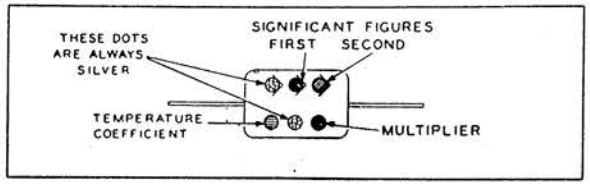

RMA 6-DOT COLOR CODE FOR MICA-DIELECTRIC CAPACITORS

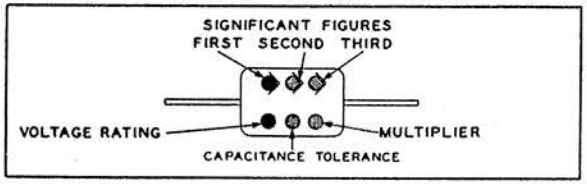

JAN 6-DOT COLOR CODE FOR MICA-DIELECTRIC CAPACITORS

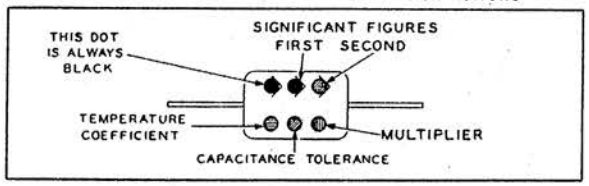

RMA COLOR CODE FOR TUBULAR CERAMIC-DIELECTRIC CAPACITORS

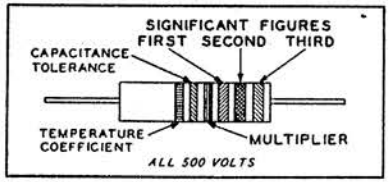

JAN COLOR CODE FOR FIXED CERAMIC-DIELECTRIC CAPACITORS

RADIAL TYPE NON-INSULATED

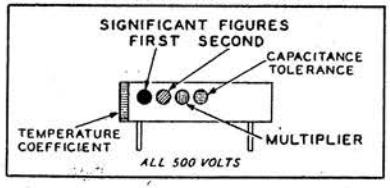

AXIAL TYPE INSULATED

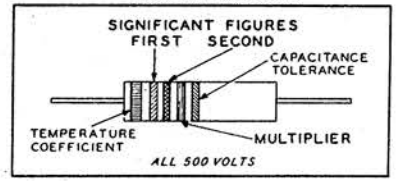

RMA: RADIO MANUFACTURERS ASSOCIATION
JAN: JOINT ARMY-NAVY

RESISTORS				CAPACITORS				
				MULTIPLIER				
TOLERANCE	MULTIPLIER	SIGNIFICANT FIGURE	COLOR	RMA MICA AND CERAMIC-DIELECTRIC	JAN MICA AND PAPER-DIELECTRIC	JAN CERAMIC DIELECTRIC	VOLTAGE RATING	TEMPERATURE COEFFICIENT
	1	0	BLACK	1	1	1		A
	10	1	BROWN	10	10	10	100	B
	100	2	RED	100	100	100	200	C
	1,000	3	ORANGE	1,000	1000	1000	300	D
	10,000	4	YELLOW	10,000			400	E
	100,000	5	GREEN	100,000			500	F
	1,000,000	6	BLUE	1,000,000			600	G
	10,000,000	7	VIOLET	10,000,000			700	
	100,000,000	8	GRAY	100,000,000		0.01	800	
	1,000,000,000	9	WHITE	1,000,000,000		0.1	900	
5	0.1		GOLD	0.1	0.1		1000	
10	0.01		SILVER	0.01	0.01		2000	
20			NO COLOR				500	

RESISTOR COLOR CODES

RMA COLOR CODE FOR FIXED COMPOSITION RESISTORS

AXIAL TYPE

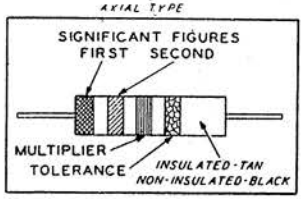

RADIAL TYPE

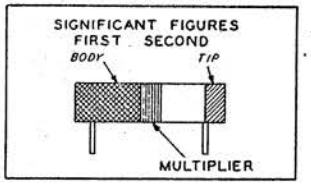

JAN COLOR CODE FOR FIXED COMPOSITION RESISTORS

AXIAL TYPE INSULATED

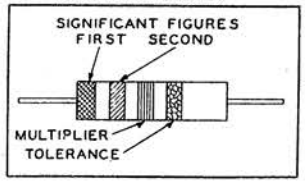

RADIAL TYPE NON-INSULATED

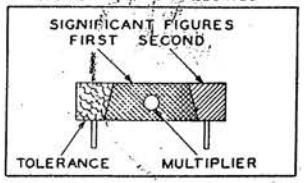

$1.00

EICO

ANOTHER PERFORMANCE PROVEN PRODUCT